Controls

Technical Catalogue

ECS12A

Sectional directional control valve

engineering beyond imagination

HISTORY OF REVISIONS

DATE	PAGE	CHANGED	REV.
December, 2018	-	First edition	00
November, 2019	13-14-15-29-30-32-40-42	Updated hydraulic diagrams and note addition of T2 drain line	01
November, 2020	15-18-32-38-40	Hydraulic schema and dimensional drawing replaced. Information added on page 38	02

ABOUT THE MANUAL

This manual contains the technical instructions for the control ESC12A.
All information given in this manual is current and valid according to the information available at the time of publication.
The data specified above only serve to describe the product. EBI Motion controls reserves to modify or revise the instructions without prior notice.

EBI Motion controls is not responsible for any damage caused by an incorrect use of the product.
Please visit www.ebimc.com for the most recent version of this manual.

CONTENTS

4 INTRODUCTION
5 GENERAL INFORMATION
6 QUICK REFERENCE GUIDE
7 APPLICATION AND SAFETY GUIDELINES
10 HYDRAULIC FLUID
12 PORT DETAILS
13 DIMENSIONS
16 TECHNICAL SPECIFICATIONS
TECHNICAL DATA
17 TYPICAL CURVES
18 CIRCUITS
19 ORDERING CODES
- ASSEMBLY SECTION
- INLET SECTION
- WORK SECTION
- OUTLET SECTION
- OPTION
- ACCESSORIES
- GENERAL CLAMPING TORQUE

INTRODUCTION

CONTROLS

EBI motion controls provides a broad choice of directional control valves expertly developed and tested to meet different market sectors' needs. EBI Control valves are suited for specialized applications for a variety of mobile equipment such as:

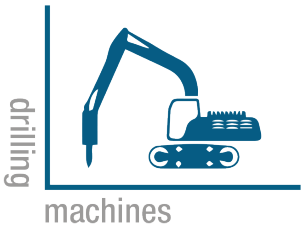

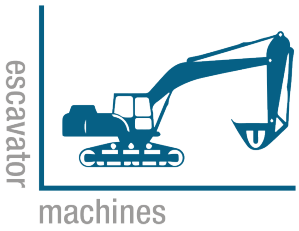

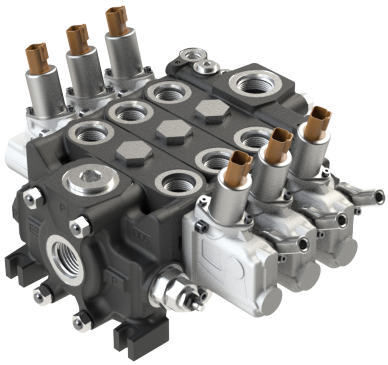

ECS12A

SECTIONAL DIRECTIONAL CONTROL VALVE

From 1 to 12 working sections.
Parallel and tandem circuit available.
Low internal leakage.
Compact directional valve with low pressure losses.
Interchangeable spools.
Wide range of auxiliary valves on the ports.
Availability of manual, hydraulic, and electrohydraulic actuations.

GENERAL INFORMATION

HYDRAULIC OPERATING PRINCIPLE

Directional control valve ECS12A basically comprises of an inlet section, directional valve sections and an outlet section. It is designed to the 6-way principle and comprises of an arrangement body (1), control spool (3), load holding check valve (2), actuation spool (4), return action spool (5), cavities for the secondary pressure valves or relief/ anti-cavitation valves (6), as well as anti-cavitation valves or plug (7).

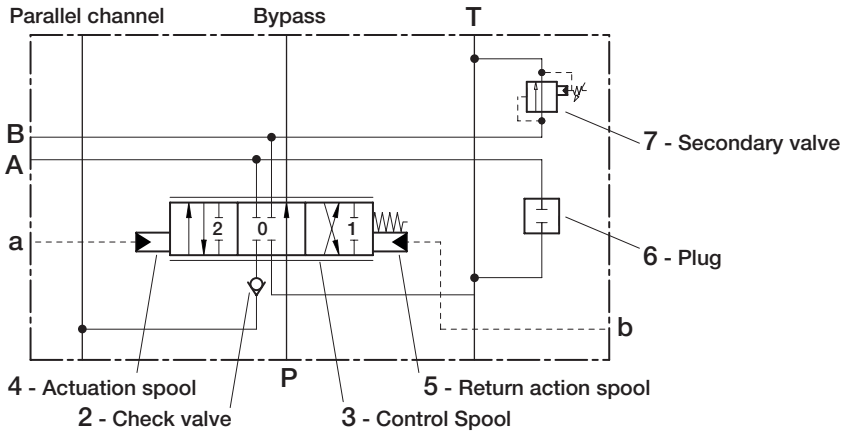

With all of the spool axes in their neutral position the flow passes via the bypass channel at zero pressure to tank. If one of the control spools is actuated then the connection from the pump to the actuator is opened via the fine control grooves, whilst the bypass is throttled by fine control grooves. If the pump pressure exceeds the actuator pressure, the pressure fluid starts to flow over the check valve to the actuator.
With further movement of the control spool the volume of fluid is increasingly diverted from the bypass channel to the actuator (fine control). The spool stroke is divided into three phases: overlap (leak-free in the neutral position), fine control range (flow and pressure), residual stroke (fully open).
Due to the large fine control range of the spool stroke it is possible to sensitively control the actuators.

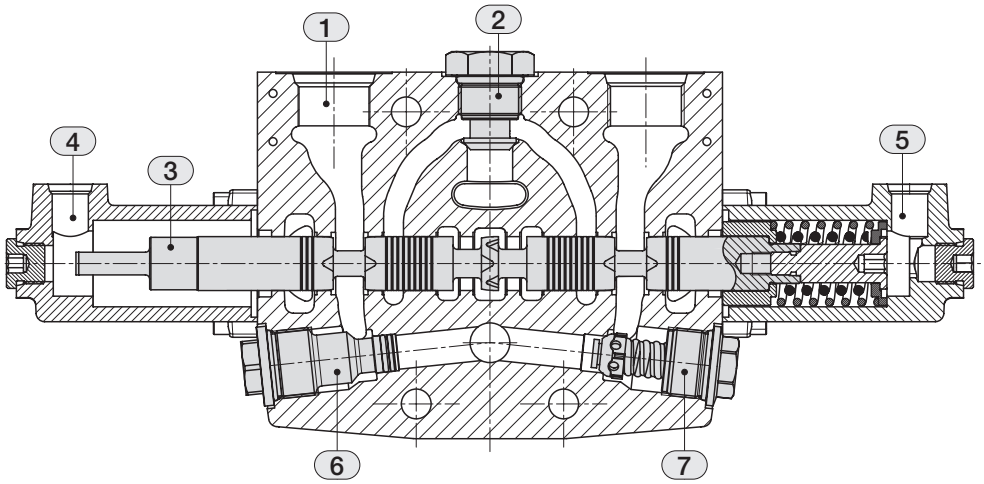

Section ECS12A with hydraulic actuation and fixed setting combined valves.

QUICK REFERENCE GUIDE

TYPE	ECS08A	ECS10A	ECS12A
Number of sections	1-12	1-12	1-12
Parallel circuit	•	•	•
Tandem circuit	•	•	•
Parallel circuit stroke (mm) - *[in]*	6 *[0.24]*	7 *[0.28]*	8 *[0.32]*
Float spool extra stroke (mm) - *[in]*	5 *[0.20]*	4.5 *[0.18]*	6 *[0.24]*
Spool pitch (mm) - *[in]*	36 *[1.42]*	41 *[1.62]*	48 *[1.89]*
Spool diameter (mm) - *[in]*	14 *[0.55]*	16 *[0.63]*	19 *[0.75]*
Nominal flow (l/min) - *[GPM]*	50 *[12]*	100 *[25]*	150 *[40]*
Operating pressure (bar) - *[psi]*	350 *[5000]*	350 *[5000]*	350 *[5000]*
OPTION CHART	**ECS08A**	**ECS10A**	**ECS12A**
Pilot operated pressure relief valve	•	•	•
Solenoid dump valve 12 VDC	•	•	•
Solenoid dump valve 24 VDC	•	•	•
Main anticavitation check valve	•	•	•
SPOOL ACTUATION	**ECS08A**	**ECS10A**	**ECS12A**
Manual actuation	•	•	•
Hydraulic actuation	•	•	•
Electrohydraulic actuation	•	•	•
SPOOL RETURN ACTION	**ECS08A**	**ECS10A**	**ECS12A**
3 positions spring centered	•	•	•
Pneumatic control	•	•	•
Detent in position 1/2 - 1 - 2	•	•	•
Detent in 4th position	•	•	•
AUXILIARY VALVES	**ECS08A**	**ECS10A**	**ECS12A**
Fixed setting combined valve	•	•	•
Fixed setting anticavitation valve	•	•	•
Adjustable pilot combined valve		•	•

APPLICATION AND SAFETY GUIDELINES

INTENDED USE

Directional control valve ECS12A is designed for industrial use.

WARRANTY

Check the package and the product for transport damage when receiving goods. The package is not meant for long term storage; protect the product appropriately. Do not dismantle the product. The warranty is void if the product has been disassembled. The manufacturer is not responsible for damages resulting from misinterpreted, non compliance, incorrect, or improper use of the product that goes against the instructions given in this document.

GENERAL SAFETY INSTRUCTIONS

The following instructions apply to all procedures associated with the product. Read these instructions carefully and follow them closely.

- Use necessary personal protective equipment when working with the product.
- Support the product properly; make sure the product cannot fall over or turn around by accident.
- Use only appropriate equipment and attachments for lifting and trasferring the product.
- Prevent unintended use of the product during installation and maintenance procedures.
- Never use the Control Valve at a pressure exceeding the rated pressure.
- Use the Control Valve within the rated flow; if not there might be malfunction or a deterioration in heat balance.
- Using low-cleanliness hydraulic fluid might cause seal failure or damage to the seal part, resulting in operation failure, or operation mistake of the machine; the customer is requested to check the cleanliness of the hydraulic fluid.

WARNING SYMBOL

The following symbols can be used in this manual:

Note:
Useful information

Danger:
Danger of death or injury

Attention:
May cause damage to the product

STORAGE OF NEW PRODUCT

Encapsulated by a protective wrapping, the control valve ECS12A shall not be exposed to direct sunlight nor to source of heat or ozone and kept in a dry place at a temperature between -20°C +50°C [-4°F +122°F].
Do not store the product in:

- Places where it might be damaged;
- Very hot/humid areas;
- Where it could get wet;
- Where it could come into contact with organic solvents, acids, alkalis and/or dangerous gases;
- In places subject to sudden, significant changes in temperature.

EBI motion control is not responsible for any damages due to a storage not in compliance with our prescriptions; For any doubts, please contact our aftersales office.

SAFETY GUIDELINES

During any operation on product ECS12A, it is recommended to pay attention to components surfaces temperature. The circuit functions are to be so designed that uncontrolled machine movements, caused by the application, are prevented and that it is possible to switch from one function to another. Take into account all of the application limits, particularly those application limits stated within this technical catalogue.

It is recommended to follow these steps and only trained and competent personnel may carry out any work on ECS12A Control Valve:

- Do not direct the jet of a pressure washing unit directly to the product
- Ensure that all matching surfaces are clean, without contamination.

- Ensure that all seals and back-up rings for the matching surfaces are flawless and correctly placed.
- Do not put any sealing material other than the standard seals.
- During the assembly of the complete Control Valve, refer to the hydraulic scheme and to the name assigned to each port.
- Use gloves in order to avoid accidental injuries during installation or maintenance.
- Do not grab / handle product from moving parts (i.e. cables, levers,...etc.)
- All Control Valve are attributable to pressure vessels. It‘s always recommended to place the components in a closed but ventilated compartment, able to protect the environment and users in case of accidental ejection of material under pressure (fittings, pipes, plugs, expander,...etc.)
- Before removing or disassembling the complete Control Valve or allowed parts (as pressure gauge ports, plugs) it is strongly recommended to vent all hydraulic pressure from the system.
- During the first start of the machine, please ensure that the grounding system is connected and stay away from moving parts.

HANDLING PRECAUTIONS

If the Control Valve doesn’t work in the adequate way, we advise you to contact our aftersales Office. However if the disassembly and assembly operations are strictly unavoidable, you must observe the following prescriptions and charge the carrying out of the operations to technicians high qualified in hydraulic field.

- The Control Valve reaches high temperature after operating the machine; start the work only after checking that the temperature is low;
- The valve can hold high internal pressure; release the inside pressure and ensure all machine actuators are in a rest position before removing the piping. In any case safely and carefully unscrew connections and fittings.
- Since hydraulic devices are all machined precisely with very accurate clearances, carry out the disassembly adassembly work at a clean place;
- Before disassembly work, get the assembly instructions by requiring to our aftersales office and prepare all the material needed for the task;
- To disassemble and assemble the valve observe strictly our mounting instructions;
- Since there is the possibility of rust when the disassembled parts are left, apply anticorrosive oil to the parts and seal them;
- Before remounting the Control Valve on the operating machine, ensure that the Control Valve has not been af fected by carrying out various hydraulic tests (e.g. Relief Valve setting, Leak test..).

Attention:

Always bear in mind that “all workers must act responsibly to ensure their own health and safety”; use of personal protection equipment is therefore essential. All the disassembly and assembly operations must observe strictly the procedures listed in the EBI procedures. EBI motion control is not responsible for any damages due to disassembly and assembly procedures not in compliance with our prescriptions. For any doubts, please contact our aftersales department.

INSTALLATION PROCEDURES

On receiving the Control Valve make sure you:

- Check if there are some sign of damage of the packaging;
- Check that the dimensions of the product seat are compatible with those of the product itself;
- Remove the plastic caps that protect the service ports and be careful not to introduce any dirt or foreign matters inside the control valve as this could damage it;
- Mount the control valve securely to a flat surface (recommended 3 point fixing); at the time do not use a ham mer to positioning by hitting; any distortion in assembly can result in spool sticking and poor control;
- Clean piping materials sufficiently before use;
- Prevent the port openings from being entered with dust or foreign matters;
- tighten the port connectors surely with the recommended fastening torques;
- If possible, install the valve in a protected environment, avoiding direct exposure to weathering, water, salt or any other corrosion substances.

FITTINGS TIGHTENING TORQUE (Nm)

Do not tighten fittings with torque more than the recommended value; If not there might be strains or damage to Control Valve so as to cause a serious accident.
If the pipings are not connected to the correspondent ports, unintentional movements might cause a serious accident; EBI motion control is not responsible for any damages due to an installation procedure not in compliance with our procedures.

SPECIFICATIONS	PORT (P)		PORT (A-B)	PORT (T)
BSP THREADS ISO 1179-1	**G 3/4**	**G 1**	**G 3/4**	**G 1**
with rubber saling (din 3869)	120	150	120	150
with copper or steel and rubber washer	120	150	120	150
UN/UNF THREADS ISO 11926-1	**1”1/16 12 UNF**	**1”5/16 12 UNF**	**1”1/16 12 UNF**	**1”5/16 12 UNF**
with o-ring	120	120	120	120

UNITS OF MEASURE - CONVERSION FACTORS

LENGHT	FLOW RATE	MASS	FORCE WEIGHT	PRESSURE
1 mm = 0,0394 in	1 l = 0,2200 gal UK	1 kg = 2,205 lb	1 Nm = 0,1020 Kgf	1 bar = 100000 Pa
1 in = 25,4 mm	1 l = 0,2642 gal US	1 lb = 0,4536 kg	1 Kgf = 9,8067 Nm	1 bar = 14,5 psi
	1 gal UK = 4,546 l			1 Pa = 0,0001 bar
	1 gal UK = 1,2010 gal US			1 Pa = 0,00014 psi
	1 gal US = 3,785 l			1 psi = 0,0689 bar
	1 gal US = 0,8327 gal UK			1 psi = 6890 Pa

PRODUCT IDENTIFICATION

The product identification data can be found on the identification plate attached to the EBI product.

SERIAL NUMBER

all manufacturing data and all sales data can be found with the serial number

PART NUMBER CODE

It is a number univocally identifying the configuration and pressure setting of a valve

Note:

Serial number and part number code have 9 characters (letters and numbers).

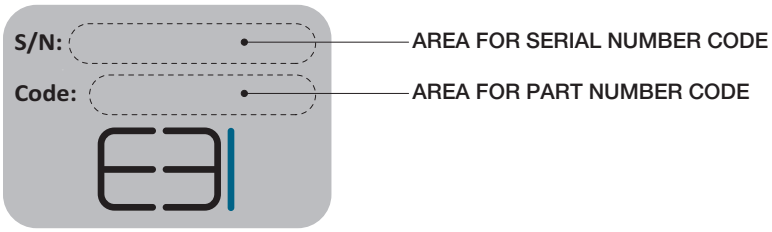

Attention:

These guidelines are not intended to be considered as complete

HYDRAULIC FLUID

Mineral oil based hydraulic fluids suitable for hydraulic systems can be used; they should have physical lubricating and chemical properties as specified by:
MINERAL OIL BASED HYDRAULIC FLUIDS HL (DIN 51524 part 1)
MINERAL OIL BASED HYDRAULIC FLUIDS HLP (DIN 51524 part 2)
For use of environmentally friendly fluids (vegetable or polyglycol base), or other fluids, please contact EBI.

OIL AND SOLUTIONS - ISO 6743/4	(°C) MIN	(°C) MAX
Mineral Oil HL, HM or HLP	-25	+80
Oil in water emulsion HFA	+5	+55
Oil in water emulsion HFB	+5	+55
Polyglycol-based aqueous solution HFC	-10	+60

Hydraulic fluids are available in different viscosity classes identified by the ISO VG number, which corresponds to the kinematic viscosity at 40°C. Here is a table showing typical viscosity changes between 0°C and 100°C for mineral oil based fluids having various viscosity classes. The fluid should be selected with the aim to achieve an appropriate operating viscosity at the expected working temperature.

VISCOSITY CLASS AND FILTRATION DATA			
Viscosity class	*kinematic viscosity (cSt)*		
	maximum (0° C)	*medium (40° C)*	*minimum (100° C)*
ISO VG 10	90	10	2.4
ISO VG 22	300	22	4.1
ISO VG 32	420	32	5.0
ISO VG 46	780	46	6.1
ISO VG 68	1400	68	7.8
ISO VG 100	2560	100	9.9

FLUID CLEANLINESS REQUIREMENTS

The cause of malfunctions in hydraulics is often found to be excessive fluid contamination. The hard contaminant particles in the fluid wear the hydraulic components and prevent the poppets from re-seating, with consequent internal leakage and system inefficiency. For the correct operation it is necessary to adopt filtration methods which guarantee for life the specified fluid cleanliness level. It is important to ensure that hydraulic fluids are brought to the appropriate cleanliness level prior filling up the systems, and, when in doubt, also to flush the hydraulic components prior to installation.

FILTRATION RATIO $BETA_x$:

It is the ratio between the number of particles before and after the filter with diameter larger than X micron.

ABSOLUTE FILTRATION RATIO ISO 4572:

It is the diameter X of the largest particle with $BETA_x \geq 75$.

CONTAMINATION CLASS ISO 4406:

It is expressed by 3 scale numbers representing respectively: the number of particles equal to or larger than 4µm, the number of particles equal to or larger than 6µm, the number of particles equal to or larger than 14µm contained in 1 ml of fluid.

CONTAMINATION CLASS NAS 1638:

It is expressed by one scale numbers representing the number of particles of different size ranges contained in 1 ml of fluid.

FILTRATION RECOMMENDATION				
Type	Nominal filtration *(micron)*	Absolute filtation rating *ISO 4572 ($BETA_x$≥75)*	Contamination class	
			ISO 4406	*NAS 1638*
System/components operating at *HIGH PRESSURE > 250 bar* *HIGH DUTY CYCLE APPLICATIONS* **Systems/components with** *LOW* **dirt tolerance**	10	X = 10... 12	19/17/14	8
System/components operating at *MEDIUM HIGH PRESSURE* *HIGH DUTY CYCLE APPLICATIONS* **Systems/components with** *MODERATELY* **dirt tolerance**	15	X = 12... 15	20/18/15	9
System/components operating at *LOW PRESSURE < 100 bar* *LOW DUTY CYCLE APPLICATIONS* **Systems/components with** *GOOD* **dirt tolerance**	25	X = 15... 25	21/19/16	10

Attention:

If the filtration demands are not met, the valve poppets can jam in the open position, with the result that the valve remains actuated. It is not possible to force back jammed poppets mechanically.

PORT DETAILS

The connection port size is indicated by an ordering code common for all EBI products.
Following tables show all available connections.

BSP THREADS ISO 1179-1	D		C		B		A		CODE
	UNI-ISO 228	mm	*in*	mm	*in*	mm	*in*	
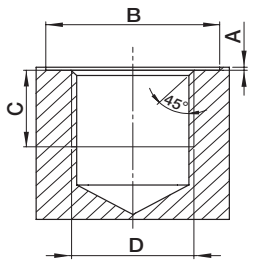	G 1/4	13	*0.51*	19	*0.75*	1	*0.094*	**1B**
	G 3/8	13	*0.51*	25	*0.98*	1	*0.04*	**2B**
	G 1/2	15	*0.59*	29	*1.14*	1.5	*0.06*	**3B**
	G 3/4	17	*0.67*	36	*1.42*	1.5	*0.06*	**4B**
	G 1	19	*0.75*	45	*1.77*	2	*0.08*	**5B**

UN/UNF THREADS ISO 11926-1	D	C		B		L		M		K	A		CODE
	ASA-B1-1	mm	*in*	mm	*in*	mm	*in*	mm	*in*		mm	*in*	
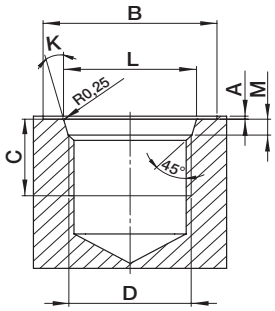	9/16-18 UNF (SAE6)	13	*0.51*	26	*1.02*	15.6	*0.61*	2.5	*0.098*	12°	1	*0.04*	**1S**
	3/4-16 UNF (SAE8)	15	*0.59*	30	*1.18*	20.6	*0.81*	2.6	*0.102*	15°	1.5	*0.06*	**2S**
	7/8-14 UNF (SAE10)	17	*0.67*	34	*1.34*	23.9	*0.94*	2.6	*0.102*	15°	1.5	*0.06*	**3S**
	1”1/16-12 UNF (SAE12)	20	*0.79*	41	*1.61*	29.2	*1.15*	3.3	*0.13*	15°	1.5	*0.06*	**4S**
	1”5/16-12 UNF (SAE16)	20	*0.79*	50	*1.97*	35.5	*1.40*	3.3	*0.13*	15°	2	*0.08*	**5S**

DIMENSIONS

ECS12A MECHANICAL ACTUATION

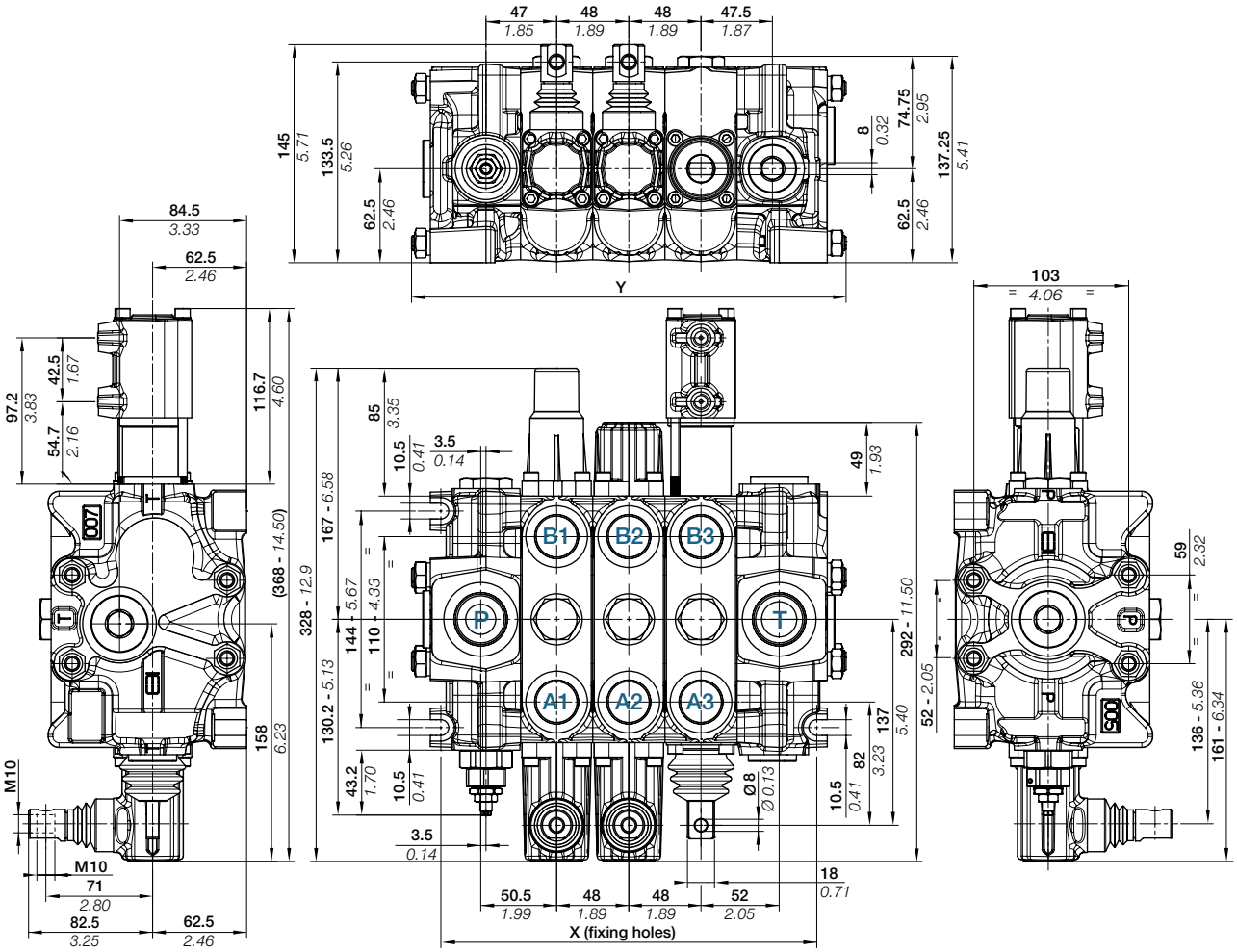

STANDARD CONNECTIONS

TYPE	BSP (ISO 1179-1)	UN-UNF (ISO 11926-1)
INLET - P	G 3/4	1”1/16-12 UNF (SAE12)
gauge connection	G 1/4	9/16” - 18 UNF (SAE6)
PORTS - A/B	G 3/4	1”1/16-12 UNF (SAE12)
OUTLET - T/T1	G 1	1”5/16-12 UNF (SAE16)
Pneumatic pilot	G 1/8	NPTF 1/8-27

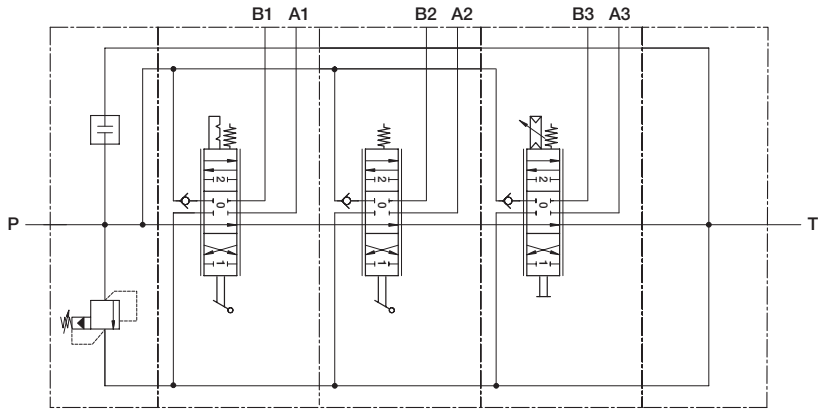

DIMENSIONS

ECS12A HYDRAULIC ACTUATION

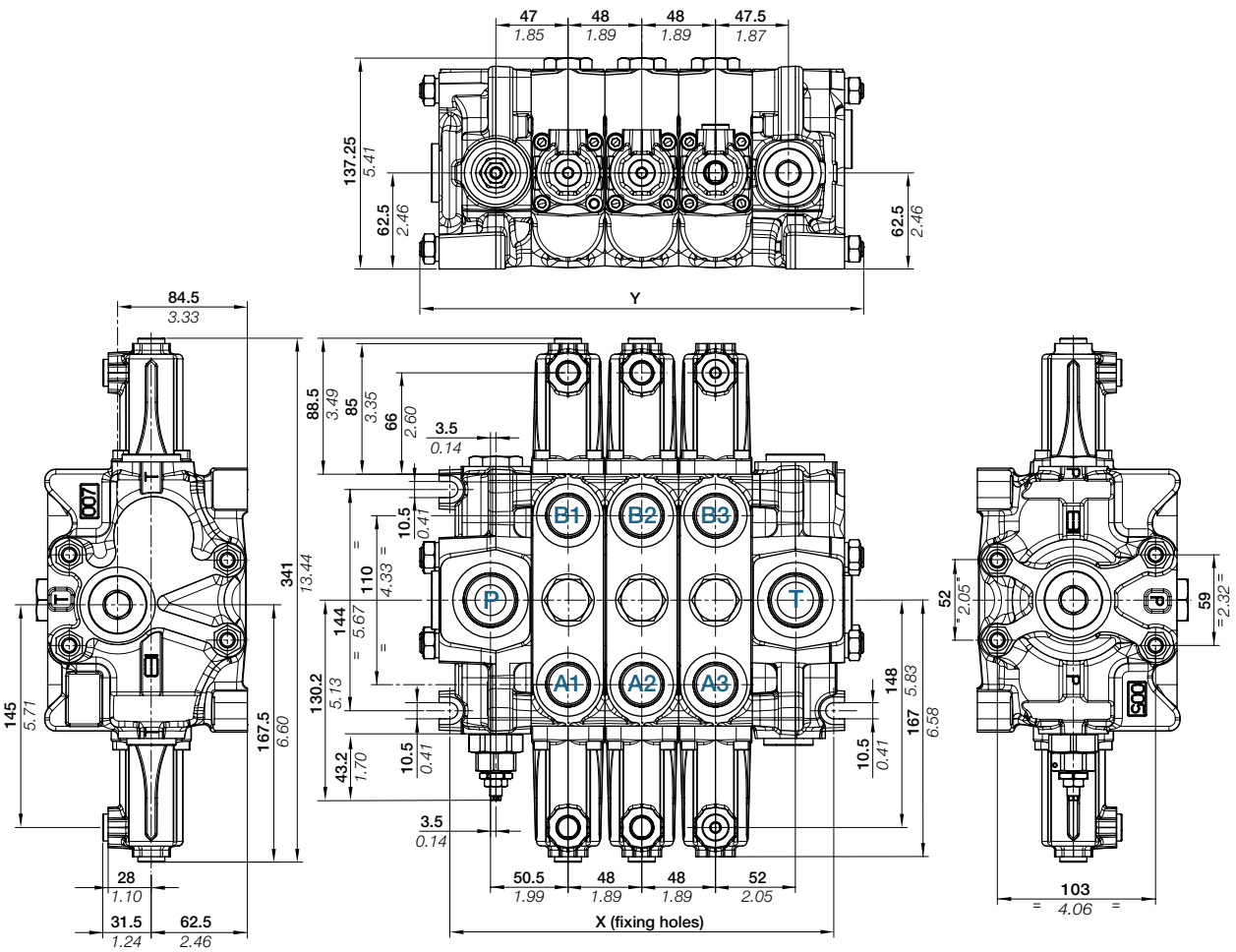

STANDARD CONNECTIONS

TYPE	BSP (ISO 1179-1)	UN-UNF (ISO 11926-1)
INLET - P	G 3/4	1”1/16-12 UNF (SAE12)
gauge connection	G 1/4	9/16” - 18 UNF (SAE6)
PORTS - A/B	G 3/4	1”1/16-12 UNF (SAE12)
OUTLET - T/T1	G 1	1”5/16-12 UNF (SAE16)
hydraulic pilot	G 1/4	9/16” - 18 UNF

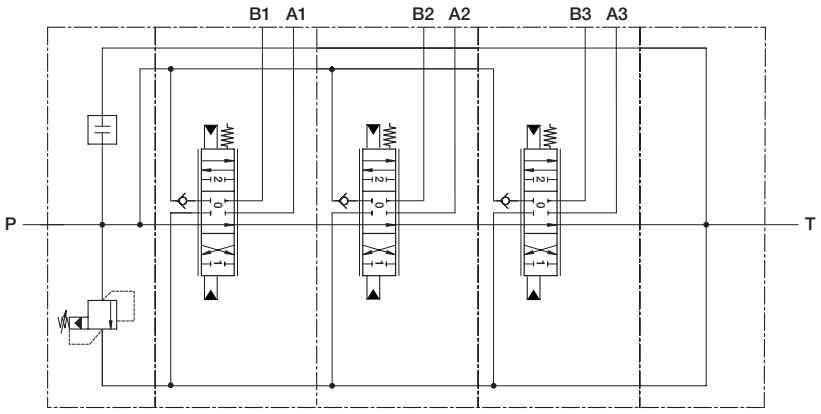

DIMENSIONS

ECS12A ELECTROHYDRAULIC ACTUATION

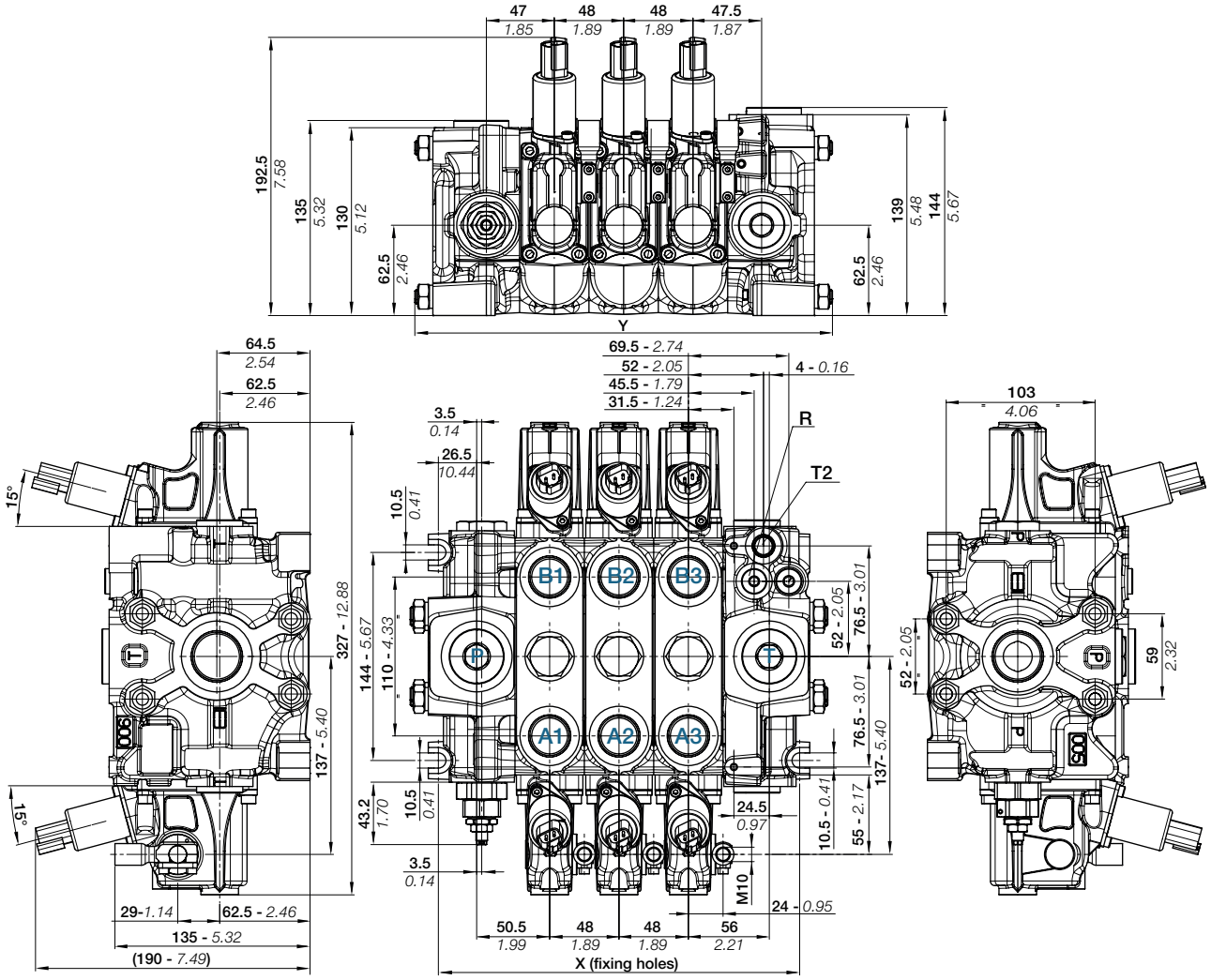

STANDARD CONNECTIONS

TYPE	BSP (ISO 1179-1)	UN-UNF (ISO 11926-1)
INLET - P	G 3/4	1”1/16-12 UNF (SAE12)
gauge connection	G 1/4	9/16” - 18 UNF (SAE6)
PORTS - A/B	G 3/4	1”1/16-12 UNF (SAE12)
OUTLET - T/T1	G 1	1”5/16-12 UNF (SAE16)

Note:

All outlet sections ECS12A for electrohydraulic configuration contain a pressure reducing valve (RDP).

We recommend to connect drain port T2 directly to tank, in order to avoid control system damages and inaccurate control.

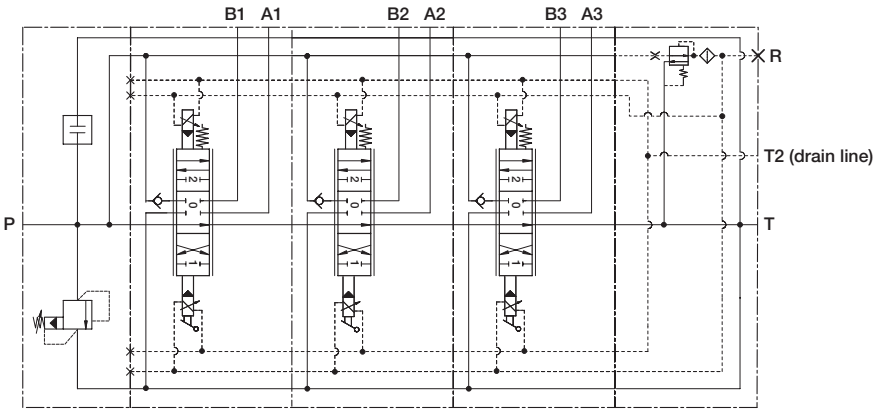

TECHNICAL SPECIFICATIONS

TYPE	X mm - *[in]*	Y mm - *[in]*	WEIGHT (mechanical version) kg - *[lb]*	WEIGHT (electrohydraulic version) kg - *[lb]*
ECS12/1	154 - *[6.07]*	194 - *[7.65]*	18,6 - *[41.0]*	19,2 - *[42.3]*
ECS12/2	202 - *[7.96]*	242 - *[9.54]*	24,8 - *[54.7]*	25,4 - *[56.0]*
ECS12/3	250 - *[9.85]*	290 - *[11.43]*	31,0 - *[68.4]*	31,6 - *[69.7]*
ECS12/4	298 - *[11.74]*	338 - *[13.32]*	37,2 - *[82.0]*	37,8 - *[83.3]*
ECS12/5	346 - *[13.63]*	386 - *[15.21]*	43,4 - *[95.7]*	44,0 - *[97.0]*
ECS12/6	394 - *[15.52]*	434 - *[17.01]*	49,6 - *[109.4]*	50,2 - *[110.7]*
ECS12/7	442 - *[17.41]*	482 - *[18.99]*	55,8 - *[123.0]*	56,4 - *[124.3]*
ECS12/8	490 - *[19.31]*	530 - *[20.88]*	62,0 - *[136.7]*	62,6 - *[138.0]*
ECS12/9	538 - *[21.20]*	578 - *[22.77]*	68,2 - *[150.4]*	68,8 - *[151.7]*
ECS12/10	586 - *[23.09]*	626 - *[24.66]*	74,4 - *[164.0]*	75,0 - *[165.3]*
ECS12/11	634 - *[24.98]*	674 - *[26.56]*	80,6 - *[177.7]*	81,2 - *[179.0]*
ECS12/12	682 - *[26.87]*	722 - *[28.45]*	86,8 - *[191.4]*	87,4 - *[192.7]*

TECHNICAL DATA

All performances in this catalogue are obtained using mineral based hydraulic oil 46 cSt viscosity at 40°C (ISO VG 46 viscosity class). All ECS12A go through functional testing at these conditions before shipment.

HYDRAULIC STANDARD SPECIFICATIONS

Nominal Flow range ..... **150 l/min - [40 GPM]**
Nominal pressure ..... **350 bar - [5000 psi]**
Hysteresis ..... **< 1 bar - [14,5 psi]**
Hydraulic fluid ..... **Mineral Oil HL, HLP (DIN 51524); phosphate ester (HFD-R)**
Fluid temperature range ..... **-20°C +80°C [-4°F +176°F]**
Fluid viscosity range ..... **10 ÷ 380 cSt**
Max contamination level ..... **9 (NAS 1638) - 20/18/15 (ISO 4406:1999)**
Recommended filtration ..... **ß10 > 75 (ISO 16889:20008)**

MECHANICAL STANDARD SPECIFICATIONS

Spool return force (without detent) ..... **90 ÷ 125 N (std spring)**
Max actuation force on the spool (radial) ..... **16 N**

GENERAL STANDARD SPECIFICATIONS

Weight (inlet section) ..... **6 Kg - 13 lbs**
Weight (work section) ..... **6,2 Kg - 13,6 lbs**
Weight (outlet section) ..... **6,4 Kg - 14 lbs**
Weight (outlet section with reducing valve) ..... **7 Kg - 15,4 lbs**
Max number of sections **12**

MATERIAL STANDARD SPECIFICATIONS SEALS

O-Rings: **Buna N** (acrylonitrile butadiene), also named **NBR** (according to ASTM), compatible with fluids having mineral oil base, water in oil emulsions, and water glycol fluids.
These seals are standard for temperatures within the range -20°C and +80°C

Back-up rings and Slide rings: **strengthened PTFE** (Politetrafluoroetilene like Teflon®, Lubriflon®, Ecoflon®, or similar). Special FPM (Viton®) seals are available on request.

Note: the seal materials are compatible with the fluids normally used in hydraulic systems; in case of special fluids, if you suspect incompatibility between the fluid used and the standard seals, contact the EBI motion controls service network.

TYPICAL CURVES

PERFORMANCE DATA - PRESSURE DROP (P-T)

Pressure characteristic as function of flow

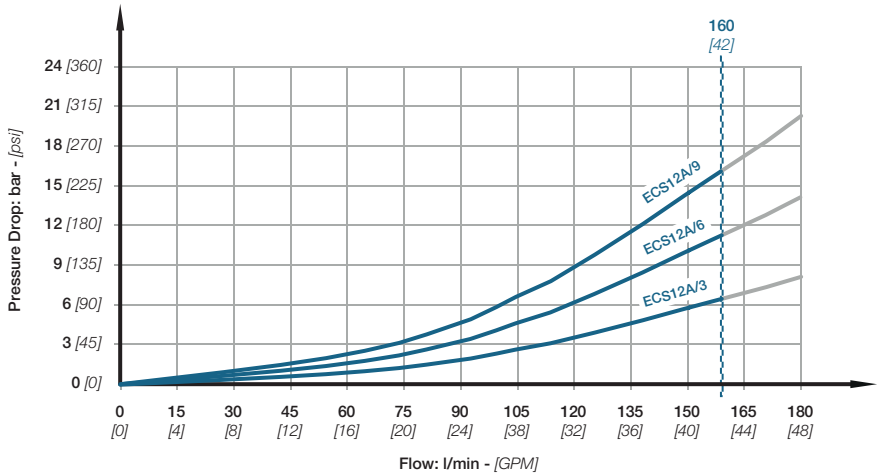

PERFORMANCE DATA - PRESSURE DROP (P-A/B)

Pressure characteristic as function of flow

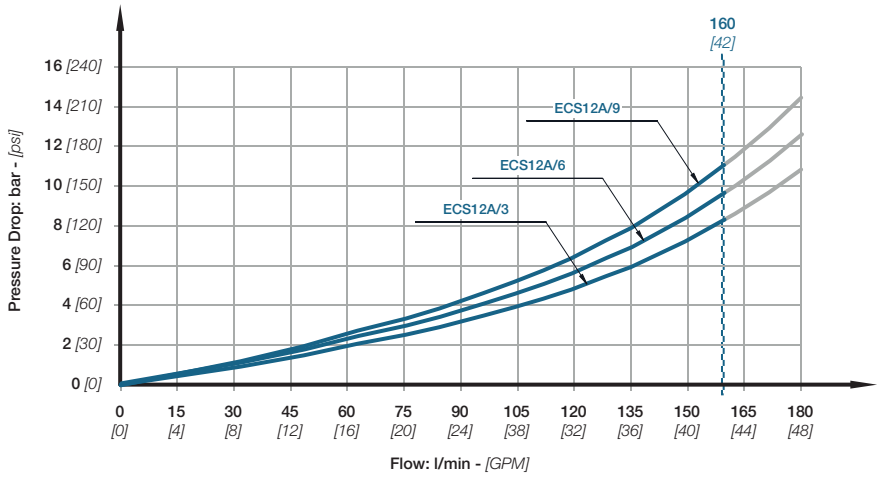

PERFORMANCE DATA - PRESSURE DROP (A/B-T)

Pressure characteristic as function of flow

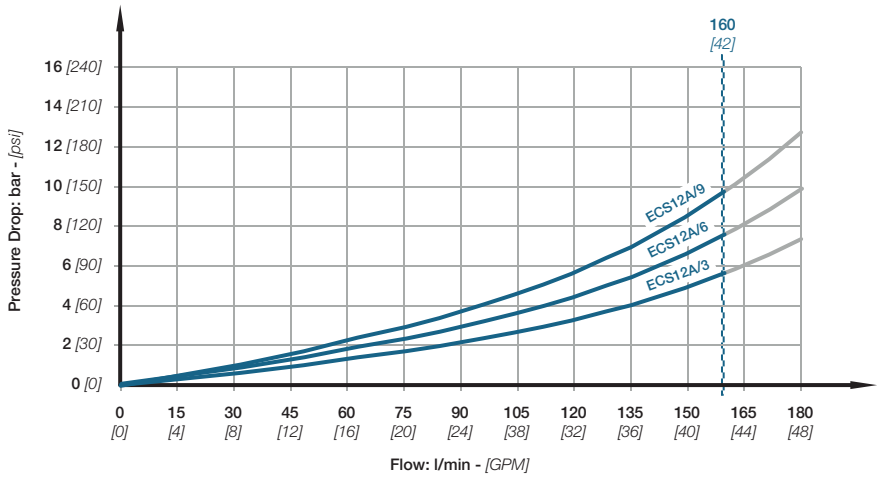

CIRCUITS

PARALLEL CIRCUIT: a number of actuators can be operated simultaneously

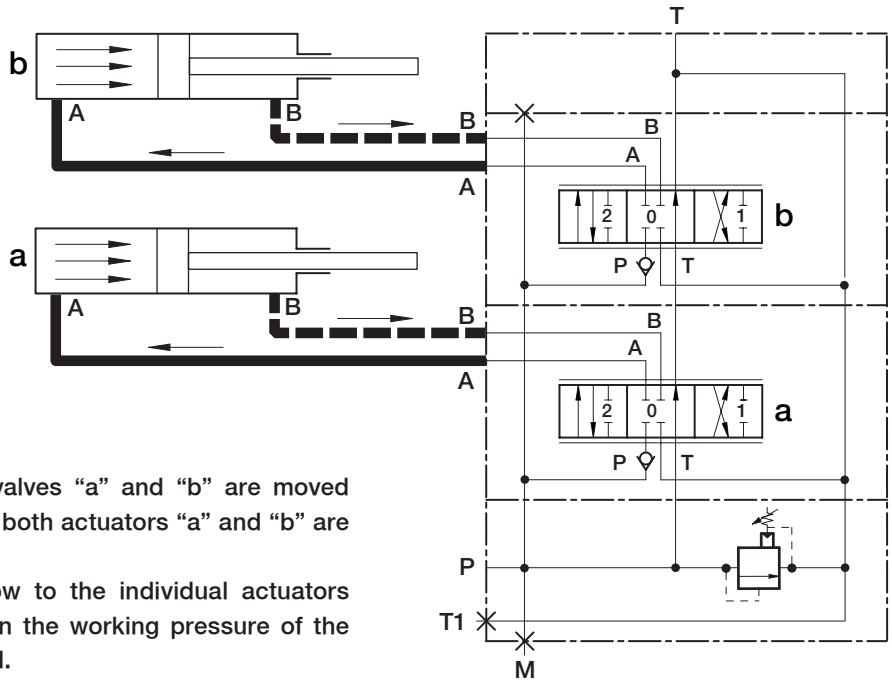

Parallel circuit

Parallel circuit

Example:

When directional valves “a” and “b” are moved to position 2 (or 1), both actuators “a” and “b” are operated.
The division of flow to the individual actuators is dependent up on the working pressure of the actuator concerned.

TANDEM CIRCUIT: only one actuator may be operated.

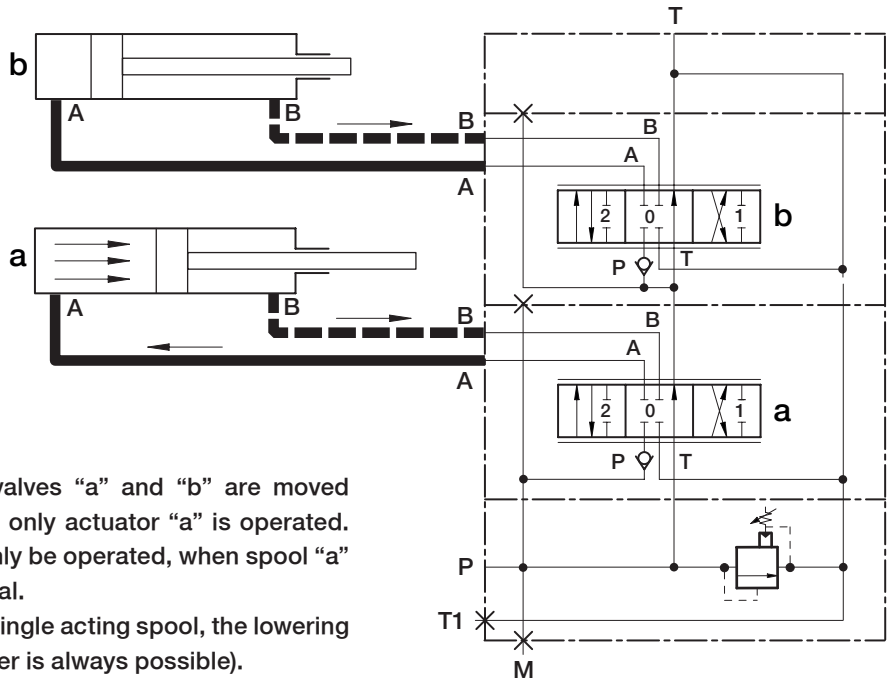

Tandem circuit

Parallel circuit

Example:

When directional valves “a” and “b” are moved to position 2 (or 1), only actuator “a” is operated. Actuator “b” can only be operated, when spool “a” is returned to neutral.
(Exception: with a single acting spool, the lowering action of the cylinder is always possible).

ORDERING CODES

The order code below provides an example of control ECS12A with standard configuration.
This example represents a ECS12A with single electrohydraulic section.
You can configure a ECS12A up to 12 work sections; ordering code in position 6, 7, 8, 9, 10, 11, 12 and 13 must be repeated for every work section.

	product						1	
info	E	C	S	1	2	A	N	1

	2	3			4						5		
inlet section	L	P	1	4	S	V	0	1	1	5	0	V	0	2

	6	7						8						9						10				11				12				13			
Work section	L	S	1	P	2	E	4	S	V	5	1	1	0	0	V	5	1	1	8	0	S	0	1	N	A	E	0	1	R	E	0	1	K	1	2	D

	14	15				
outlet section	L	T	1	R	5	S

	16	
options	X	1

POSITION		CODE	DESCRIPTION	PAGE
info		ECS12A	Product	
	1	N1	Assembly section	22
Inlet section	2	L	Inlet side	23
	3	P14S	Arrangement body inlet	24
	4	V01150	Inlet valve on port 1	25
	5	V02	Inlet valve on port 2	
work section	6	L	Section side	27
	7	S1P2E4S	Arrangement section body	28
	8	V51100	Valve on port A	31
	9	V51180	Valve on port B	
	10	S01N	Spool	32
	11	AE01	Actuation kit	33
	12	RE01	Return action kit	36
	13	K12D	Solenoid kit	38
outlet section	14	L	Outlet side	39
	15	T1R5S	Arrangement outlet body	40
options	16	X1	Painted option	43

Note:
Ordering codes in position 2, 6 and 14 are always the same.
Indicate the mounting side of the valve.

All sectional ECS12 valves have symmetric bodies; thanks to this characteristic, it is possible to change the control side, by simply reversing the spool 180°.
All valves can easly be changed from right inlet (R) to left inlet (L) and vice versa.
This example represents a valve in left configuration.

COMPLETE SECTIONAL VALVE ECS12A

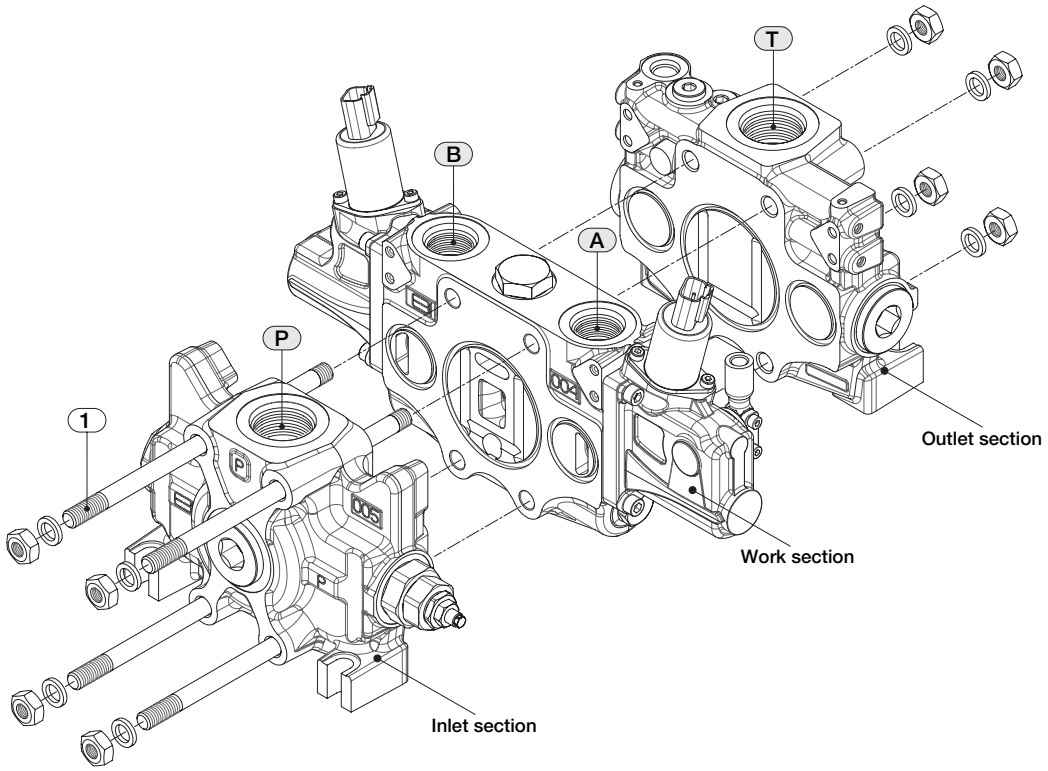

INLET SECTION

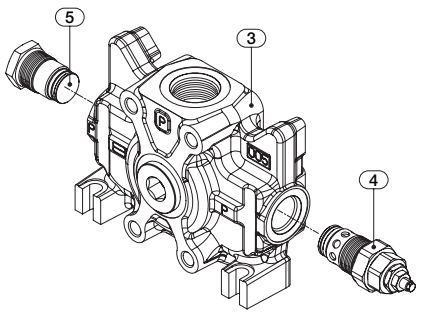

WORK SECTION

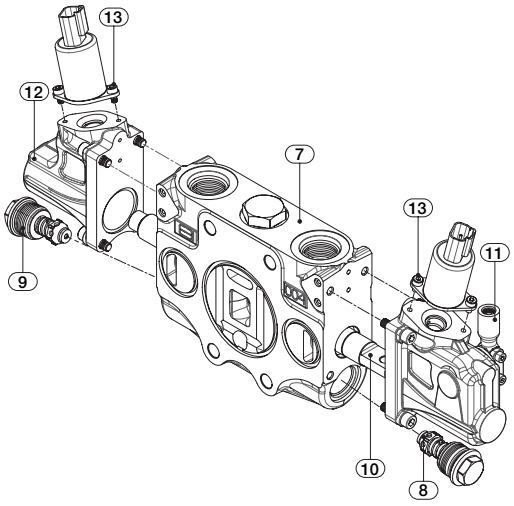

OUTLET SECTION

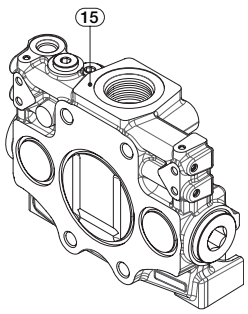

ASSEMBLY MODALITY FOR DIRECTIONAL CONTROL VALVE

Attention:

in the case of mixed configurations (section with electrohydraulic actuation and sections with mechanical or hydraulic actuation) it is mandatory to place all the electrohydraulic sections near to the outlet section. As a consequence all the mechanical or hydraulic sections will be positioned immediately after the inlet section.

EXAMPLE OF CONFIGURATION:

ECS12A/6 with 3 mechanical section and 3 electrohydraulic section: directional control valve with left inlet

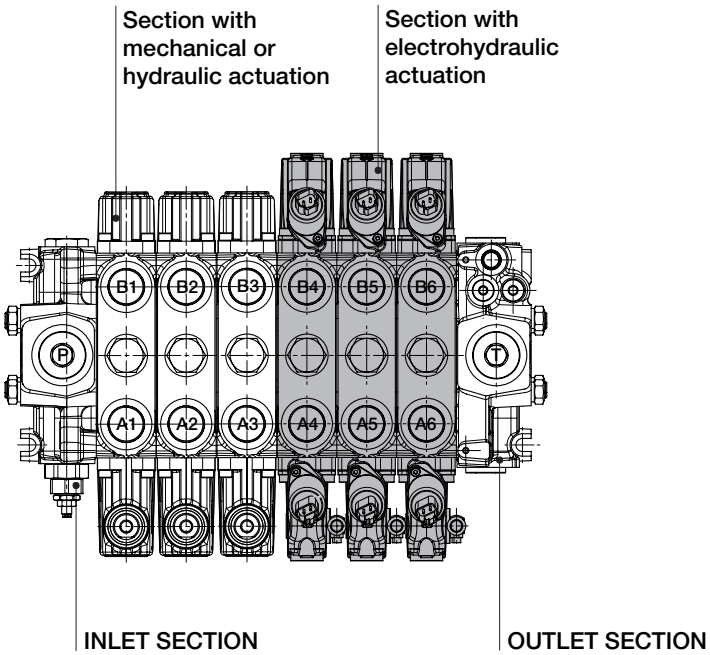

Note:

All mixed configurations are assembled with outlet section with RDP valve.
Assembly modality also applies to directional control valve with right inlet.

Note:

For mixed configurations different from example, please contact our Sales Office.

ASSEMBLY SECTION

product	1
E C S 1 2 A	N 1

Tie rod kit allows the correct assembly of directional sectional valves ECS12A.
Tie rod's length depends on the number of sections; each valve is assembled with tie rod kits including a tie rod, two nuts and two washer.

CODE	DESCRIPTION	LENGHT	CLAMPING TORQUE
N1	Assembly tie rod kit for single work section	194 mm - *7.644 in*	40 Nm
N2	Assembly tie rod kit for 2 work sections	242 mm - *9.535 in*	
N3	Assembly tie rod kit for 3 work sections	290 mm - *11.426 in*	
N4	Assembly tie rod kit for 4 work sections	338 mm - *13.317 in*	
N5	Assembly tie rod kit for 5 work sections	386 mm - *15.208 in*	
N6	Assembly tie rod kit for 6 work sections	434 mm - *17.010 in*	
N7	Assembly tie rod kit for 7 work sections	482 mm - *18.991 in*	
N8	Assembly tie rod kit for 8 work sections	530 mm - *20.882 in*	
N9	Assembly tie rod kit for 9 work sections	578 mm - *22.773 in*	
N10	Assembly tie rod kit for 10 work sections	626 mm - *24.664 in*	
N11	Assembly tie rod kit for 11 work sections	674 mm - *26.556 in*	
N12	Assembly tie rod kit for 12 work sections	722 mm - *28.447 in*	

This example represents ECS12A with one single work section; tie rod kit **N1**.

Note:
Each ECS12A must be assembled with n.4 tie rod kit.

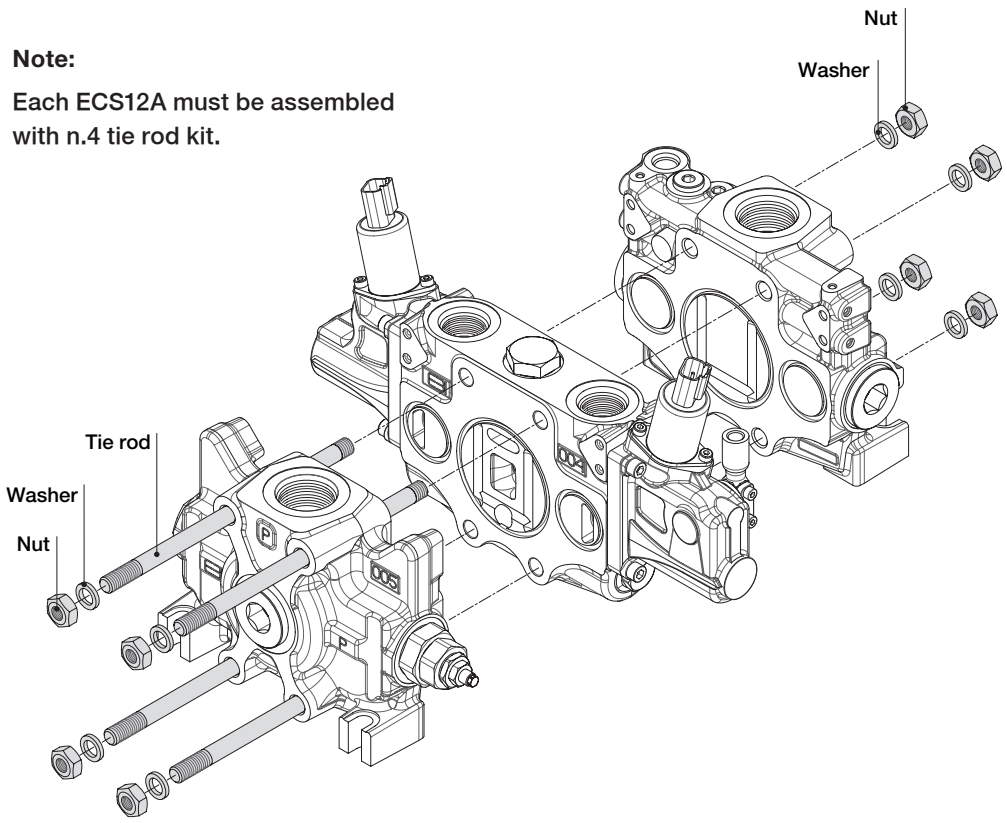

INLET SECTION

2	3				4						5		
L	P	1	4	S	V	0	1	1	5	0	V	0	2

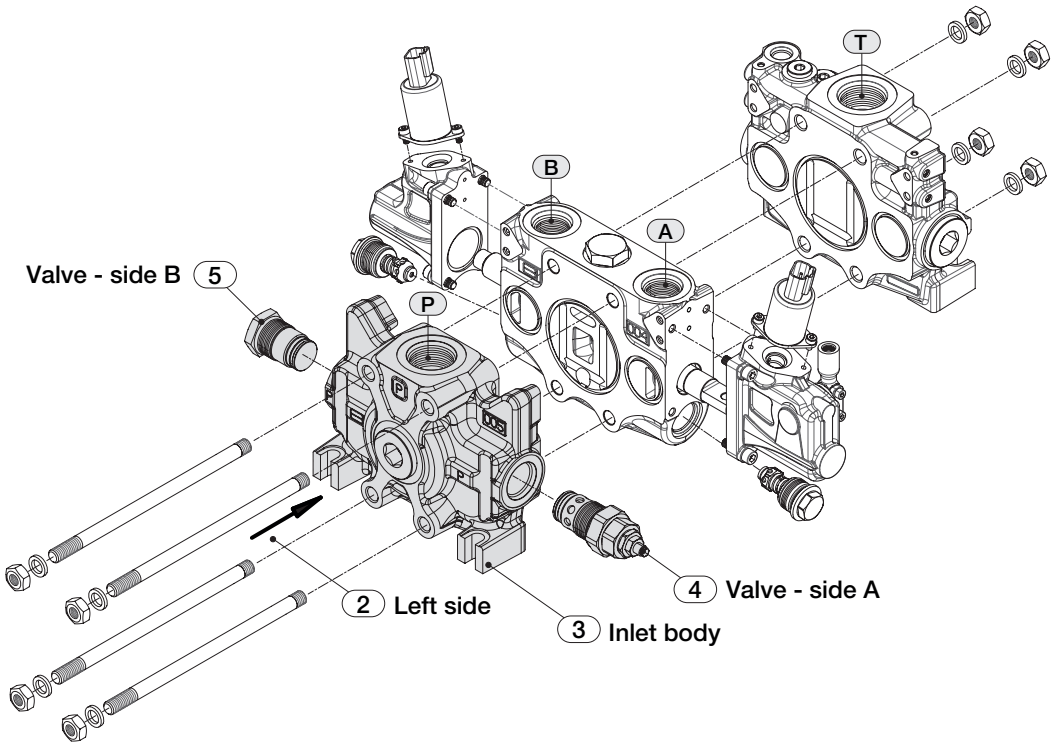

This example represents inlet section ECS12A with left configuration.

L . . . . . .left inlet side
P14S . . . . . .Upper inlet - 1”1/16-12 UNF (SAE12)
V01150 . . . . . .Pilot operated pressure relief valve (150 bar) - side A
V02 . . . . . .Relief valve plugged - side B

INLET SIDE

On all sectional ECS12A valves it is possible to choose a RIGHT or LEFT inlet.

CODE	DESCRIPTION	DRAWING	CODE	DESCRIPTION	DRAWING
L	Inlet side LEFT	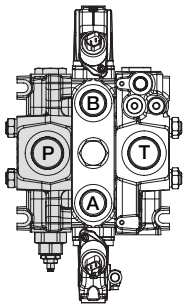	R	Inlet side RIGHT	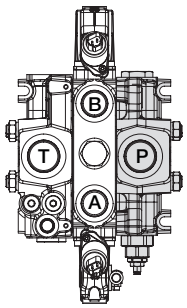

Convention for all ECS12A valves with inlet right (R) or left inlet (L):

- side A = spool actuation side
- side B = spool return action side.

INLET SECTION

2	3				4						5		
L	P	1	4	S	V	0	1	1	5	0	V	0	2

ARRANGEMENT INLET BODY

ECS12A arrangement body inlet is available in two configurations: SAE thread or BSP thread.
The maximum flexibility of the inlet body configuration is guaranteed by the positioning of the service ports plug.
This table represents arrangement inlet body in left configuration.

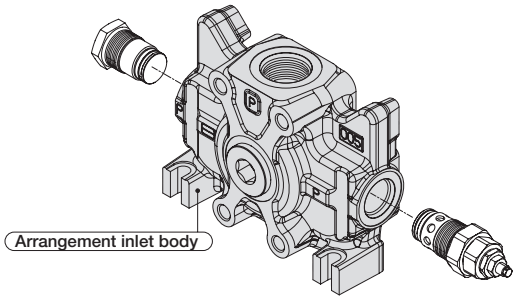

CODE	DESCRIPTION	CONFIGURATION
P14S	Upper inlet - 1”1/16-12 UNF (SAE12)	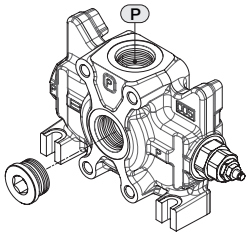
P14B	Upper inlet - G 3/4	
P24S	Central inlet - 1”1/16-12 UNF (SAE12)	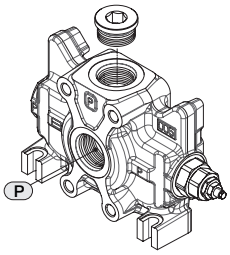
P24B	Central inlet - G 3/4	
P34S	Upper inlet - 1”1/16-12 UNF (SAE12) with (P1) gauge connection SAE 6	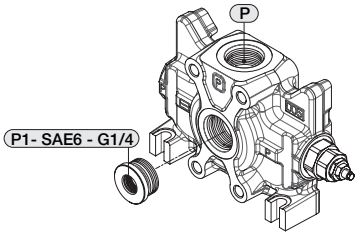
P34B	Upper inlet - G 3/4 with (P1) gauge connection G 1/4	
P44S	Central inlet - 1”1/16-12 UNF (SAE12) with (P1) gauge connection SAE 6	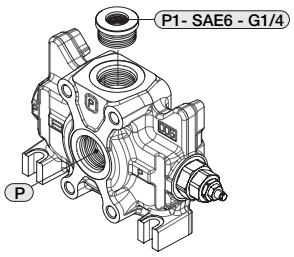
P44B	Central inlet - G 3/4 with (P1) gauge connection G 1/4	

Note:
Inlet section with 1”5/16-12 UNF (SAE16) thread or G 1” thread are available on request.

INLET SECTION

2	3				4						5		
L	P	1	4	S	V	0	1	1	5	0	V	0	2

INLET VALVE CLASSIFICATION

All inlet section require double choice on side A and side B; in the following table the available valves are shown.

- Valve type V01 requires factory setting (V01150); 150 is a value expressed in bar
- Valve type V04 includes coil kit
- 3 coil types are available in 12 and 24 Volt versions: DIN, DEUTSCH DT04 and AMP JUNIOR

CODE	DESCRIPTION	SYMBOL
V01	Pilot operated pressure relief valve	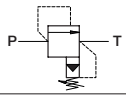
V02	Relief valve plugged	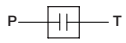
V0412A	Solenoid dump valve 12 VDC - AMP Junior	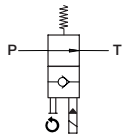 All solenoids dump valves are fitted with push and twist override
V0424A	Solenoid dump valve 24 VDC - AMP Junior	
V0412D	Solenoid dump valve 12 VDC - DT04 Deutsch	
V0424D	Solenoid dump valve 24 VDC - DT04 Deutsch	
V0412H	Solenoid dump valve 12 VDC - DIN 43650	
V0424H	Solenoid dump valve 24 VDC - DIN 43650	
V06	Main anticavitation check valve	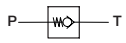

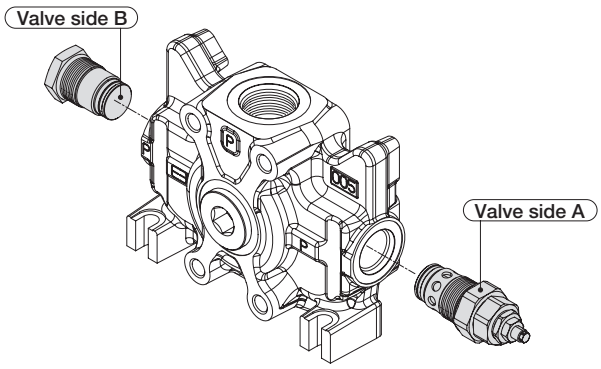

The example represents inlet section in left configuration; valve V01150 type on side A and valve V02 type on side B

- Valve side A = spool actuation side
- Valve side B = spool return action side

SETTING RANGE

Pilot operate pressure relief valve (**V01**): **50/350 bar**

In the following table the available valve combinations are shown.

valve combination		VALVE PORT B								
		V01	V02	V0412A	V0424A	V0412D	V0424D	V0412H	V0424H	V06
VALVE PORT A	V01		•	•	•	•	•	•	•	•
	V02	•	•	•	•	•	•	•	•	•
	V0412A	•	•							•
	V0424A	•	•							•
	V0412D	•	•							•
	V0424D	•	•							•
	V0412H	•	•							•
	V0424H	•	•							•
	V06	•	•	•	•	•	•	•	•	

INLET SECTION

PERFORMANCE DATA - PILOT OPERATED PRESSURE RELIEF VALVE (V01)

Pressure characteristic as function of flow

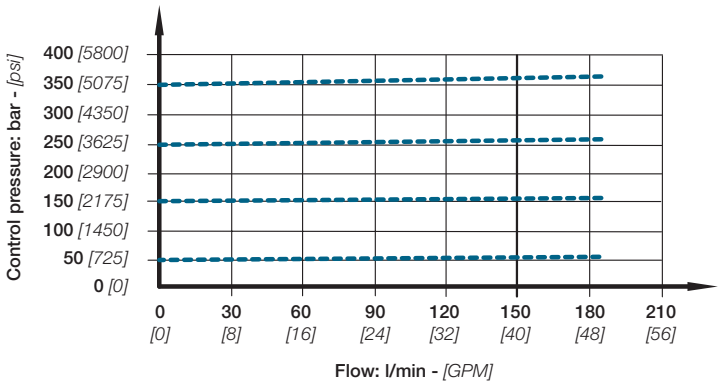

PERFORMANCE DATA - MAIN ANTICAVITATION CHECK VALVE (V06)

Pressure characteristic as function of flow

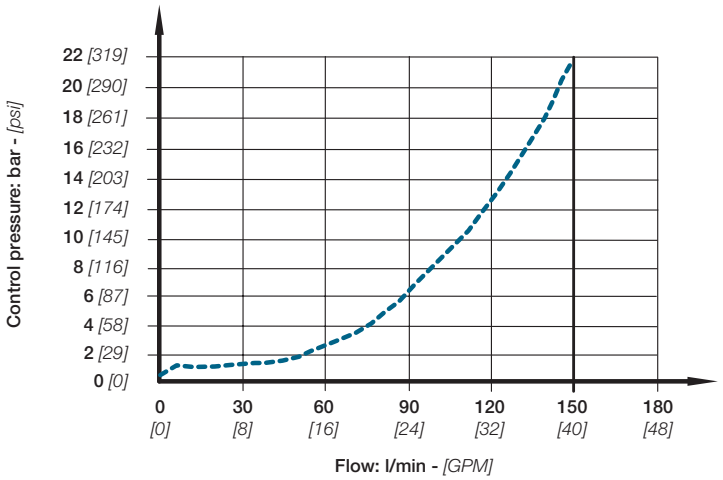

WORK SECTION

6	7	8	9	10	11	12	13
L	S1P2E4S	V51100	V51180	S01N	AE01	RE01	K12D

This code indicates the complete working section set up; arrangement body, auxiliary valves, spool, actuation type and return action type.

- Should you order the working section only, you must specify the entry side: right (R) or left (L)
- Leave out the spool return action code when choosing hydraulic actuation “AH”
- Sections designed to house auxiliary valve option required double choice on work ports A and B
- Connector kit must be ordered separately with all electrohydraulic actuations; 2 coil kit each work section.

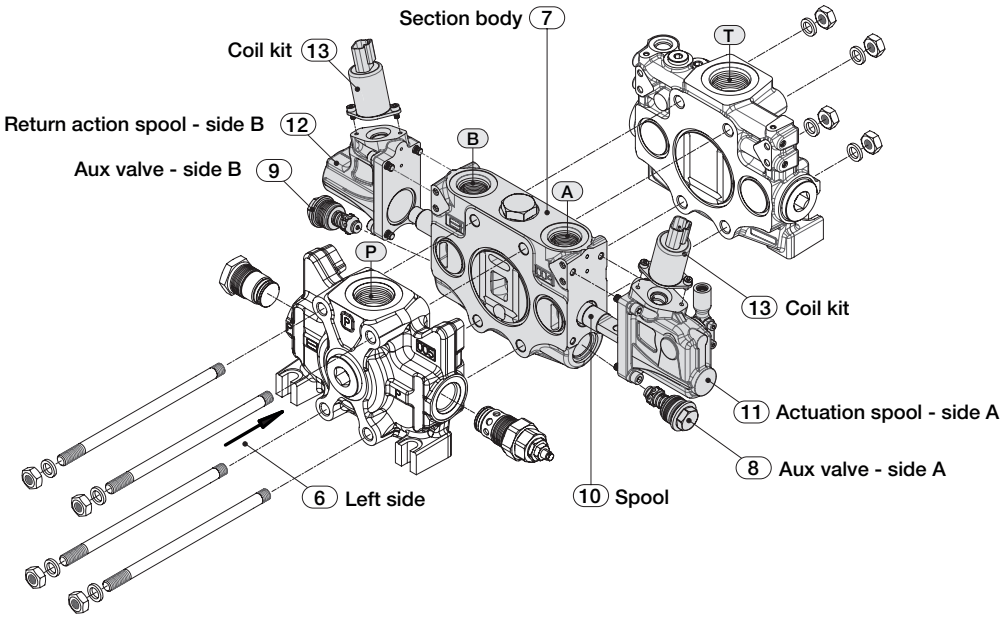

This example represents work section ECS12A with left configuration:

L . . . . . .Left side
S1P2E4S . . . . . .Parallel section with fixed valves - ports 1”1/16-12 UNF (SAE12)
V51100 . . . . . .Fixed setting combined valve (100 bar) - port A
V51180 . . . . . .Fixed setting combined valve (180 bar) - port B
S01N. . . . . .Spool 3 positions double-acting (150 l/min)
AE01. . . . . .Electrohydraulic actuation with lever control - side A
RE01 . . . . . .Electrohydraulic control return action - side B
K12D . . . . . .Connector coil kit - 12 VDC Deutsch DT04

CODE	DESCRIPTION	DRAWING	CODE	DESCRIPTION	DRAWING
L	Inlet side LEFT	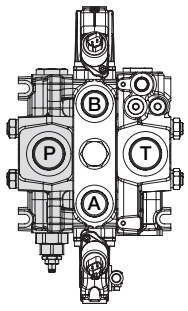	R	Inlet side RIGHT	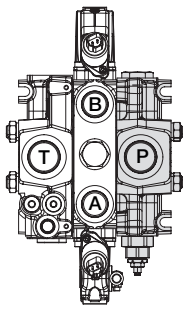

Convention for all ECS12A valves with inlet right (R) or left inlet (L):

- side A = spool actuation side
- side B = spool return action side.

WORK SECTION

6	7	8	9	10	11	12	13
L	S1P2E4S	V5110 0	V5118 0	S01N	AE01	RE01	K12D

ARRANGEMENT SECTION BODY

ECS12A arrangement section is available in two configurations: SAE thread or BSP thread.

Work section is available with parallel circuit or tandem circuit.

There are two types of arrangement section body:

- Body for electrohydraulic actuation
- Body for mechanical or hydraulic actuation.

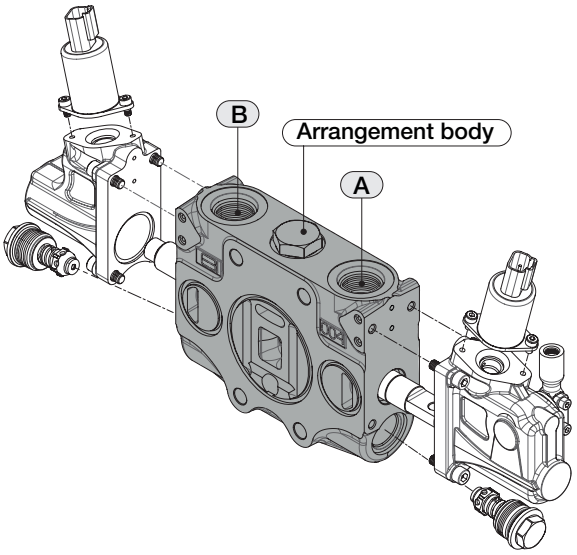

Each arrangement section contains:

- Body
- Check valve
- Gasket kit.

The Gasket kit allows the correct coupling between the surfaces of the working sections. The gasket kit changes according to the type of the working section; the number and type of gaskets is different between a mechanically operated section and a section with an electrohydraulic control (see the following table).

GASKET KIT FOR ELECTROHYDRAULIC SECTION

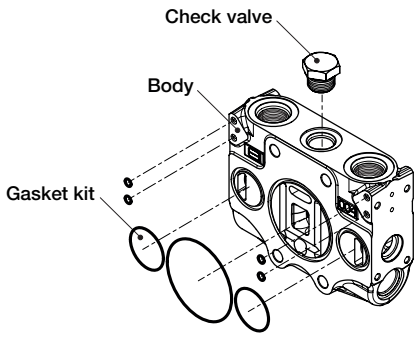

GASKET KIT FOR MECHANICAL OR HYDRAULIC SECTION

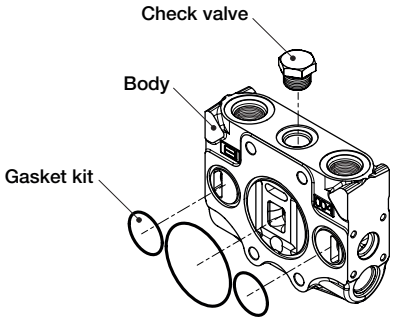

Each work section can be ordered with or without auxiliary valves; in the following table the two different sections are shown.

ARRANGEMENT SECTION BODY WITH AUXILIARY VALVES

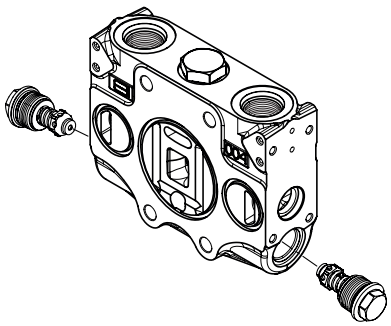

ARRANGEMENT SECTION BODY WITHOUT AUXILIARY VALVES

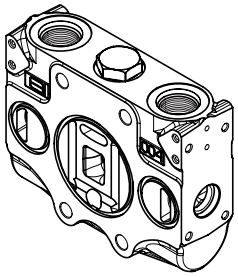

WORK SECTION

ARRANGEMENT BODY FOR MECHANICAL OR HYDRAULIC ACTUATION (PARALLEL CIRCUIT)

CODE	DESCRIPTION	CONFIGURATION
S1P1M4S	PARALLEL section with adjustable valves ports 1”1/16-12 UNF (SAE12) *(only for valve type:* **V55** - **V57***)*	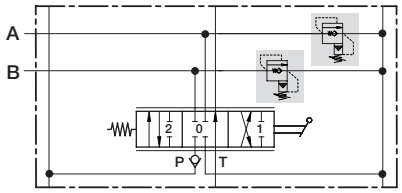
S1P1M4B	PARALLEL section with adjustable valves ports G 3/4 *(only for valve type:* **V55** - **V57***)*	
S1P2M4S	PARALLEL section with fixed valves ports 1”1/16-12 UNF (SAE12) *(only for valve type:* **V51** - **V52** - **V53***)*	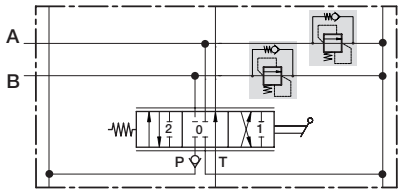
S1P2M4B	PARALLEL section with fixed valves ports G 3/4 *(only for valve type:* **V51** - **V52** - **V53***)*	
S2P1M4S	PARALLEL section without valves ports 1”1/16-12 UNF (SAE12)	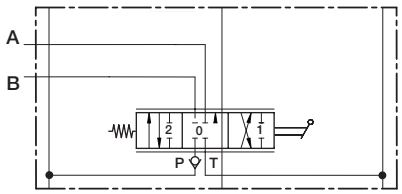
S2P1M4B	PARALLEL section without valves ports G 3/4	

ARRANGEMENT BODY FOR MECHANICAL OR HYDRAULIC ACTUATION (TANDEM CIRCUIT)

CODE	DESCRIPTION	CONFIGURATION
S1T1M4S	TANDEM section with adjustable valves ports 1”1/16-12 UNF (SAE12) *(only for valve type:* **V55** - **V57***)*	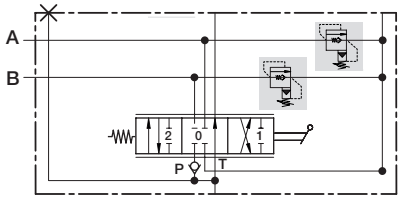
S1T1M4B	TANDEM section with adjustable valves ports G 3/4 *(only for valve type:* **V55** - **V57***)*	
S1T2M4S	TANDEM section with fixed valves ports 1”1/16-12 UNF (SAE12) *(only for valve type:* **V51** - **V52** - **V53***)*	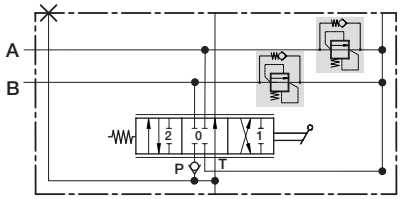
S1T2M4B	TANDEM section with fixed valves ports G 3/4 *(only for valve type:* **V51** - **V52** - **V53***)*	
S2T1M4S	TANDEM section without valves ports 1”1/16-12 UNF (SAE12)	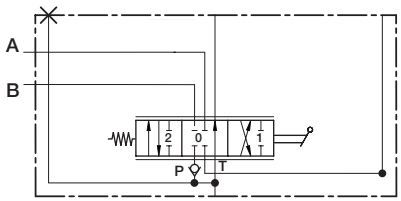
S2T1M4B	TANDEM section without valves ports G 3/4	

WORK SECTION

ARRANGEMENT BODY FOR ELECTROHYDRAULIC ACTUATION (PARALLEL CIRCUIT)

CODE	DESCRIPTION	CONFIGURATION
S1P1E4S	PARALLEL section with adjustable valves ports 1”1/16-12 UNF (SAE12) *(only for valve type:* **V55** - **V57***)*	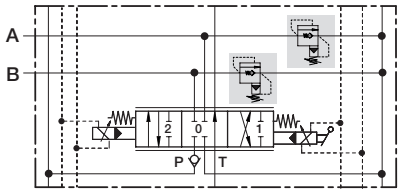
S1P1E4B	PARALLEL section with adjustable valves ports G 3/4 *(only for valve type:* **V55** - **V57***)*	
S1P2E4S	PARALLEL section with fixed valves ports 1”1/16-12 UNF (SAE12) *(only for valve type:* **V51** - **V52** - **V53***)*	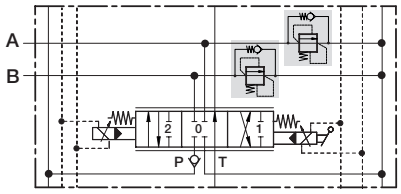
S1P2E4B	PARALLEL section with fixed valves ports G 3/4 *(only for valve type:* **V51** - **V52** - **V53***)*	
S2P1E4S	PARALLEL section without valves ports 1”1/16-12 UNF (SAE12)	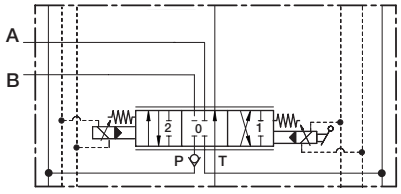
S2P1E4B	PARALLEL section without valves ports G 3/4	

ARRANGEMENT BODY FOR ELECTROHYDRAULIC ACTUATION (Tandem circuit)

CODE	DESCRIPTION	CONFIGURATION
S1T1E4S	TANDEM section with adjustable valves ports 1”1/16-12 UNF (SAE12) *(only for valve type:* **V55** - **V57***)*	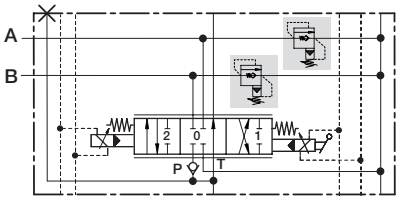
S1T1E4B	TANDEM section with adjustable valves ports G 3/4 *(only for valve type:* **V55** - **V57***)*	
S1T2E4S	TANDEM section with fixed valves ports 1”1/16-12 UNF (SAE12) *(only for valve type:* **V51** - **V52** - **V53***)*	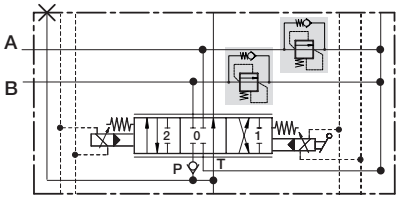
S1T2E4B	TANDEM section with fixed valves ports G 3/4 *(only for valve type:* **V51** - **V52** - **V53***)*	
S2T1E4S	TANDEM section without valves ports 1”1/16-12 UNF (SAE12)	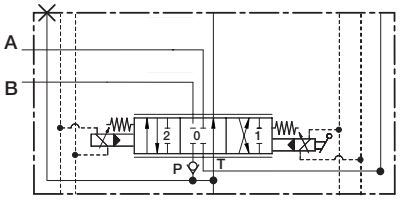
S2T1E4B	TANDEM section without valves ports G 3/4	

WORK SECTION

6	7	8	9	10	11	12	13
L	S1P2E4S	V5110 0	V5118 0	S01N	AE01	RE01	K12D

AUXILIARY VALVES

ECS12A sections with auxiliary valves require double choice on work side A and side B.
The bodies with a fixed setting valve housing are different from bodies with adjustable valves housing.
Valves type V51 and V57 require factory setting:

FIXED SETTING COMBINED VALVE (V51100):

V51 ..... fixed setting combined valve
100 ..... value expressed in bar

ADJUSTABLE PILOT COMBINED VALVE (V57100):

V57 ..... adjustable pilot combined valve
100 ..... value expressed in bar

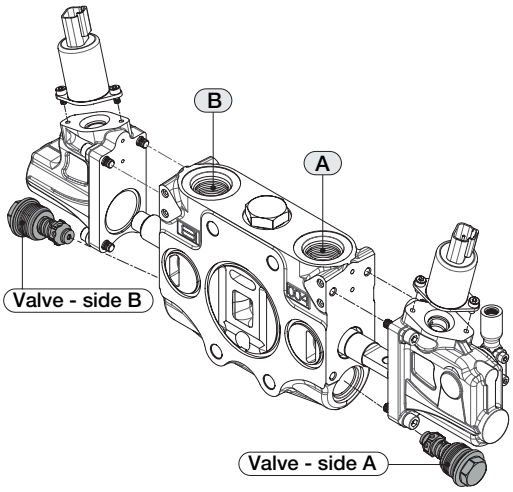

CODE	DESCRIPTION	SYMBOL	SETTING
V51	Fixed setting combined valve	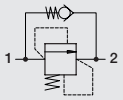	50 - 350 bar
V52	Fixed setting valve plugged	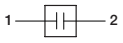	
V53	Fixed setting anticavitation valve		
V55	Adjustable valve plugged	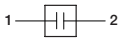	
V57	Adjustable pilot combined valve	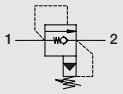	50 - 350 bar

FIXED SETTING COMBINED VALVE (V51):

this valve is not adjustable; factory setting is available from 50 to 350 bar with 10 bar steps.

PILOT ADJUSTABLE COMBINED VALVE (V57):

this valve is adjustable; factory setting is available from 50 to 350 bar with 5 bar steps.

Adjustable PIlot combined valve (V57)
Pressure characteristic as function of flow

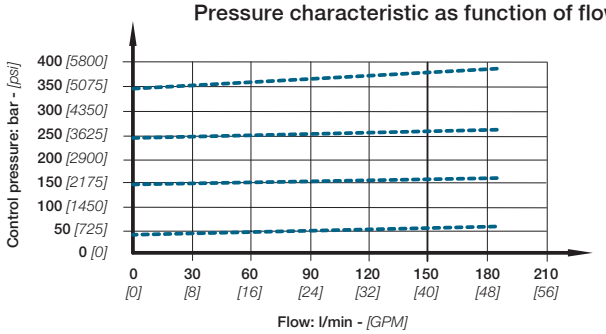

Fixed setting combined valve (V51)
Pressure characteristic as function of flow

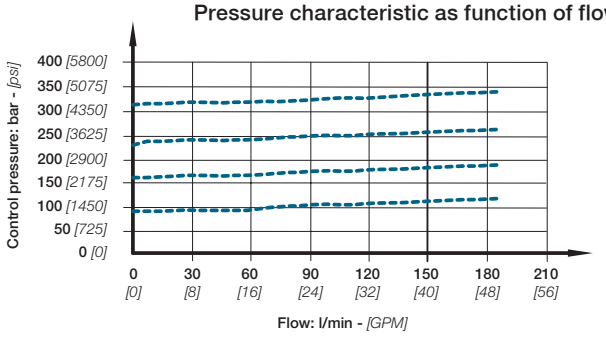

Fixed setting anticavitation valve (V53)
Pressure characteristic as function of flow

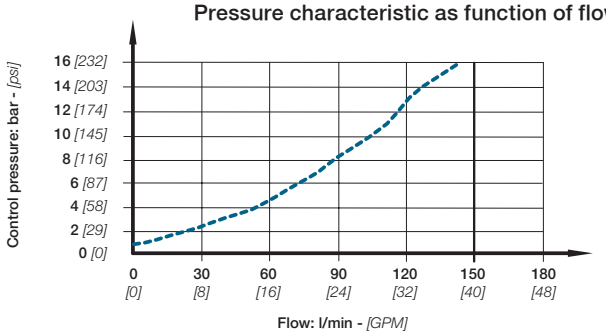

WORK SECTION

6	7	8	9	10	11	12	13
L	S1P2E4S	V511006	V511806	S01N	AE01	RE01	K12D

SPOOL CLASSIFICATION

Each ECS12A section contains a spool; each spool is compatible with all actuations.

Example with spool 3 position double acting:

S01N ..... Nominal flow (150 l/min)

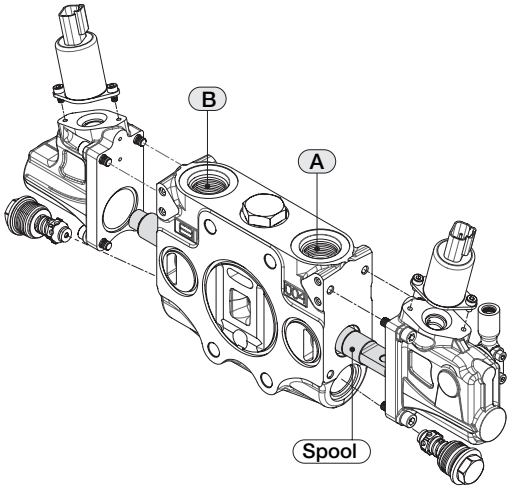

CODE	DESCRIPTION	SYMBOL
S01	Spool 3 positions double acting	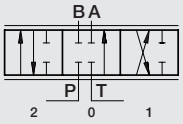
S02	Spool 3 positions double acting A/B to tank	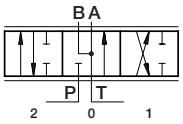
S03	Spool 3 positions single acting on A	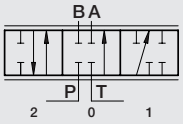
S04	Spool 3 positions single acting on B	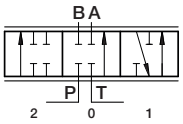
S05	Spool 4 positions double acting with float in 4th position	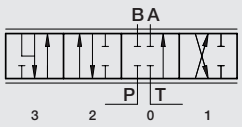
S11	Spool 3 positions double acting A to tank - B blocked	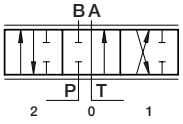
S12	Spool 3 positions double acting A blocked - B to tank	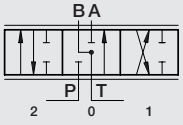

Note:

S05 spool needs a special machining on the body and a special detent kit. The spools shown correspond to standard configuration, for different applications contact our Sales Office.

WORK SECTION

6	7	8	9	10	11	12	13
L	S 1 P 2 E 4 S	V 5 1 1 0 0	V 5 1 1 8 0	S 0 1 N	A E 0 1	R E 0 1	K 1 2 D

SPOOL ACTUATION

Spool actuations are classified in three categories:

MECHANICAL ACTUATION

- Requires the choice of spool return action (side B).
- Requires a dedicated body.

HYDRAULIC ACTUATION

- Leave out the spool return action code when choosing hydraulic actuation AH01B, AH01S, AH02B, AH02S, AH04B and AH04S.
- Requires a dedicated body.

ELECTROHYDRAULIC ACTUATION

- Requires a dedicated body.

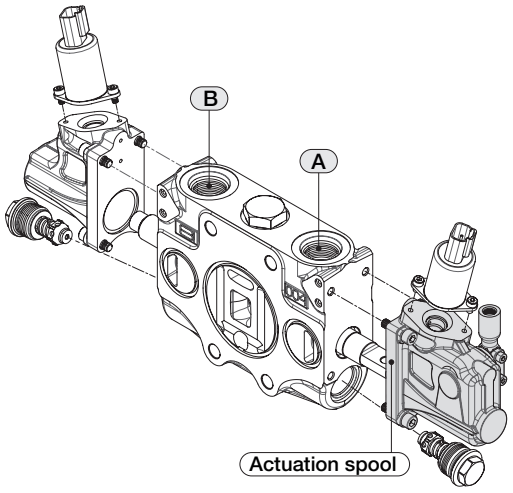

SPOOL ACTUATION - SIDE A (MECHANICAL ACTUATION)

CODE	DESCRIPTION	CONFIGURATION	SYMBOL
AM01	Control lever	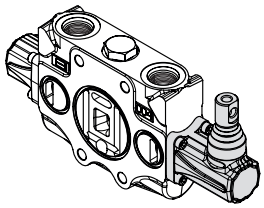	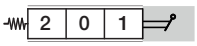
AM02	Control lever rotated 180°	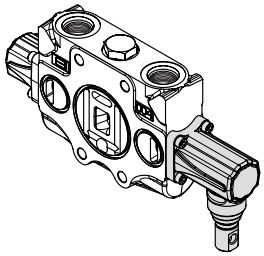	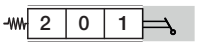
AM05	Control tang spool end Spool end thickness = **8 MM** Spool end hole = **Ø8 MM**	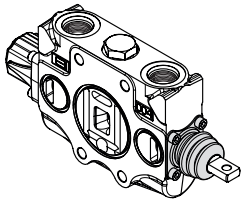	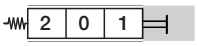

Note:

the joystick control and the double command are available on request; for more information contact our sales office.

WORK SECTION

SPOOL ACTUATION (HYDRAULIC ACTUATION)

CODE	DESCRIPTION	CONFIGURATION	SYMBOL
AH01B	Hydraulic actuation with side ports (G 1/4)	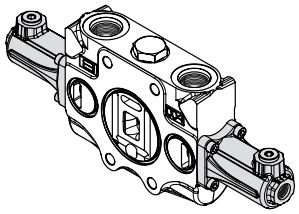	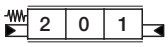
AH01S	Hydraulic actuation with side ports (SAE 6)		
AH02B	Hydraulic actuation with upper ports (G 1/4)	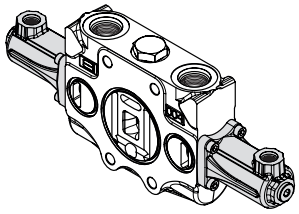	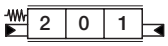
AH02S	Hydraulic actuation with upper ports (SAE 6)		
AH04B	Hydraulic actuation with stroke limiter ports (G 1/4)	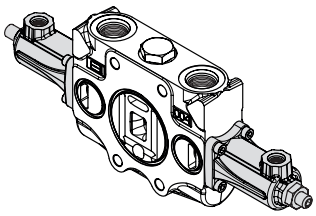	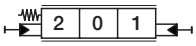
AH04S	Hydraulic actuation with stroke limiter ports (SAE 6)		

SPRING CHARACTERISTIC CURVES HYDRAULIC ACTUATION

The graph shows the spool stroke as a function of the pressure operating.

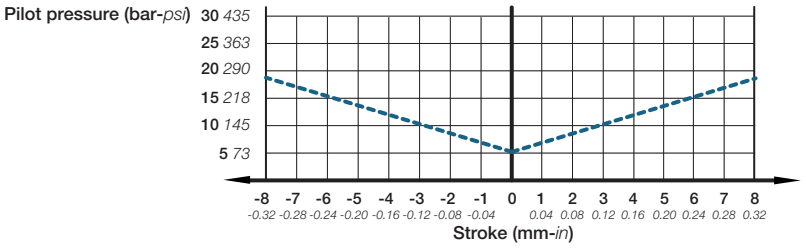

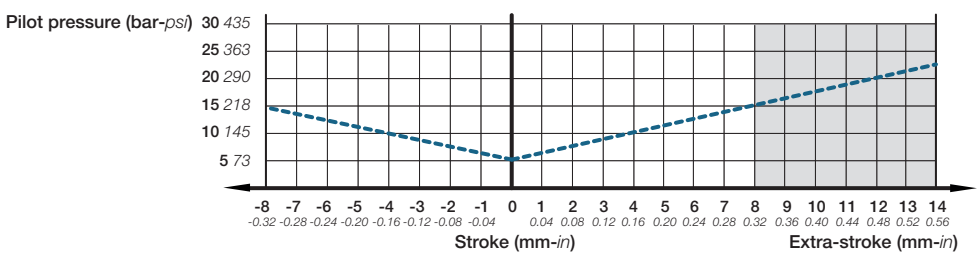

WORK SECTION

SPOOL ACTUATION - SIDE A (ELECTROHYDRAULIC ACTUATION)

CODE	DESCRIPTION	CONFIGURATION	SYMBOL
AE01	Electrohydraulic actuation with lever control	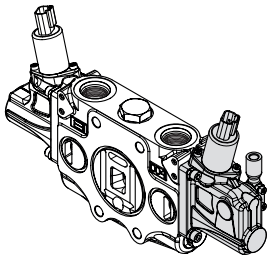	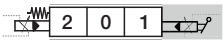
AE02	Electrohydraulic actuation with lever control and stroke limiter	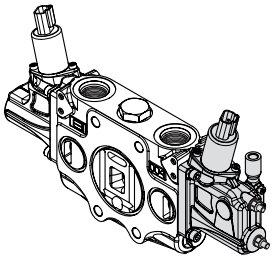	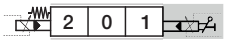
AE03	Electrohydraulic actuation without lever control	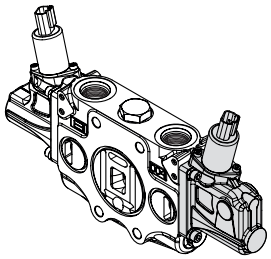	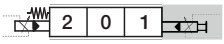
AE04	Electrohydraulic actuation without lever control and stroke limiter	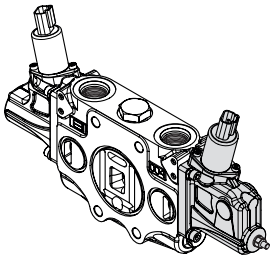	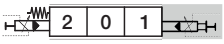

WORK SECTION

6	7	8	9	10	11	12	13
L	S1P2E4S	V5110 0	V5118 0	S01N	AE01	RE01	K12D

SPOOL RETURN ACTION

ECS12A spool return action are classified in two categories:

- Mechanical return action spool
- Electrohydraulic return action spool

Spool return action for mechanical actuation have two different spring types:

- **M** (medium spring)
- **S** (soft spring)

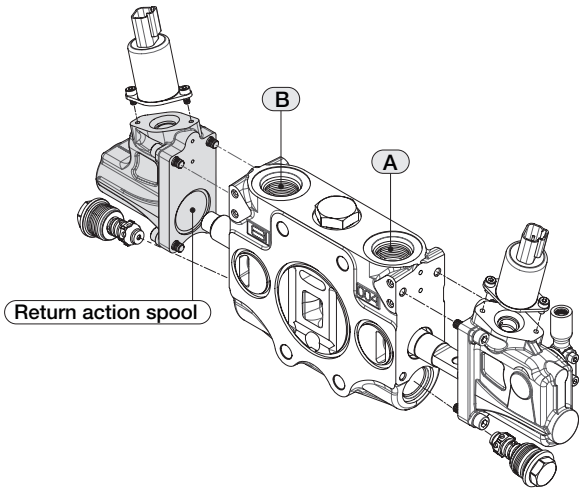

SPRING	F1 PRELOADING (N)	F2 END STROKE (N)
M (medium)	130	180
S (soft)	105	145

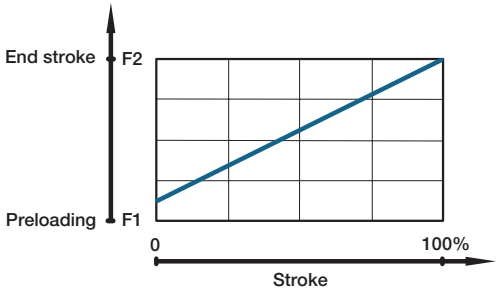

SPOOL RETURN ACTION - SIDE B (MECHANICAL ACTUATION)

CODE	DESCRIPTION	CONFIGURATION	SYMBOL
RM01M	3 position spring centered spool (MEDIUM spring)	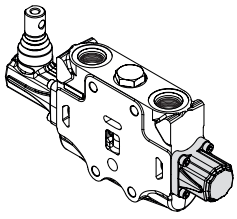	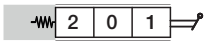
RM01S	3 position spring centered spool (SOFT spring)		
RM04M	Detent in position 1/2	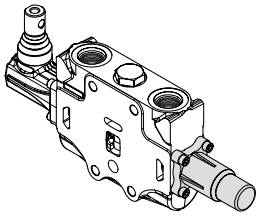	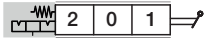
RM05M	Detent in position 1		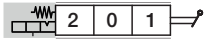
RM06M	Detent in position 2		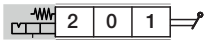
RM11M	Detent in 4th position		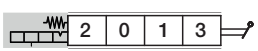
RM12	Detent in position 1/0/2 without spring		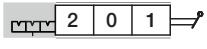

WORK SECTION

CODE	DESCRIPTION	CONFIGURATION	SYMBOL
RR01	Proportional pneumatic control (connections G 1/8)	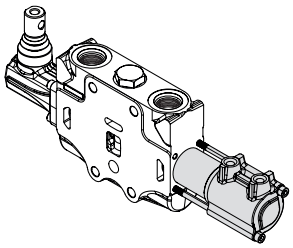	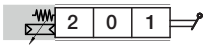
RR03	Proportional pneumatic control (connections NPTF 1/8-27)		

SPRING CHARACTERISTIC CURVE PNEUMATIC CONTROL

The diagram shows the spool stroke as a function of the pneumatic pressure operating.

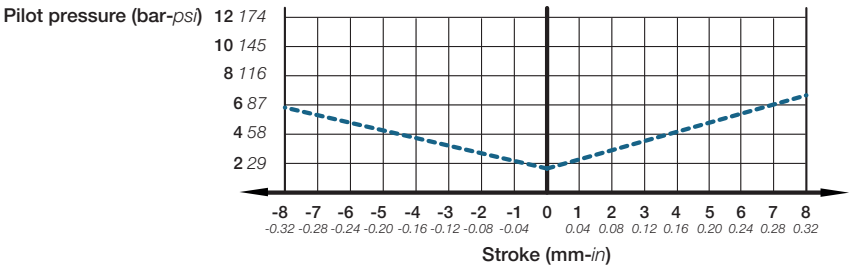

SPOOL RETURN ACTION - SIDE B (ELECTROHYDRAULIC ACTUATION)

CODE	DESCRIPTION	CONFIGURATION	SYMBOL
RE01	Spool return kit for Electrohydraulic actuation *(only for:* **AE01-AE02-AE03***)*	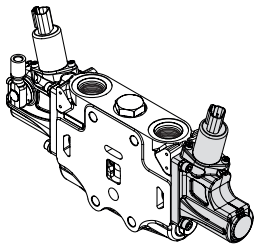	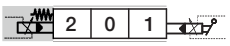
RE02	Spool return kit for Electrohydraulic actuation with stroke limiter *(not with:* **AE02***)*	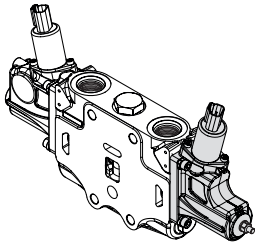	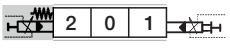

WORK SECTION

6	7	8	9	10	11	12	13
L	S1P2E4S	V5110 0	V5118 0	S01N	AE01	RE01	K12D

COIL KIT

Coil kit must be ordered separately with all electrohydraulic actuations.

2 coil types are available in 12 and 24 Volt versions:

- **DEUTSCH DT04**
- **AMP JUNIOR**

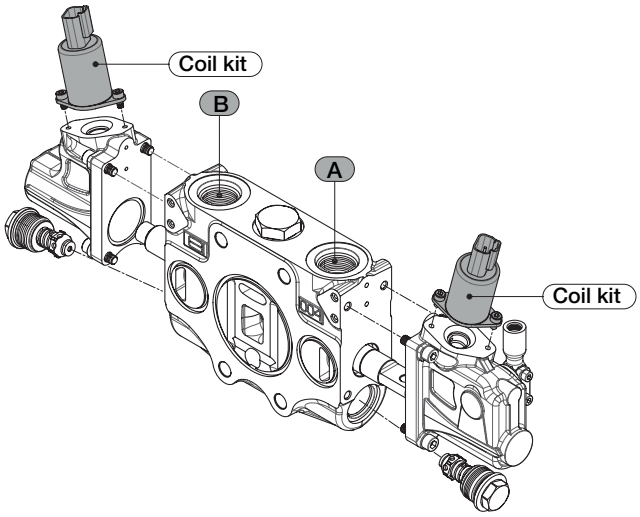

COIL AND CONNECTOR DATA

SPECIFICATIONS	K12D	K24D	K12A	K24A
Connector type	DEUTSCH DT04-2P		AMP Junior timer (AMP84-9419)	
Supply voltage	12 VDC	24 VDC	12 VDC	24 VDC
Coil resistance	4.7 Ohm ±5%	20.8 Ohm ±5%	4.7 Ohm ±5%	20.8 Ohm ±5%
Maximal current	1500±10 mA	750±10 mA	1500±10 mA	750±10 mA
PWM Frequency recommended	PWM 100 Hz			
Filter screen	125 µm			
Response time	< 50 ms			
Duty cicle	ED 100%			
Degree of protection	Deutsch IP69K		AMP IP65	
Connector color	Black		Mossy-grey	
Feeding reducing pressure	40 bar			
Max pressure on pilot tank line	5 bar			

CHARACTERISTIC CURVE CURRENT VS. PRESSURE (Less than 2% Hysteresis)

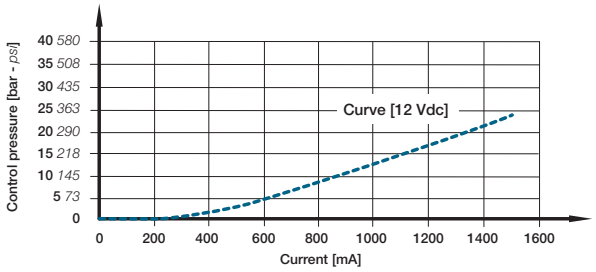

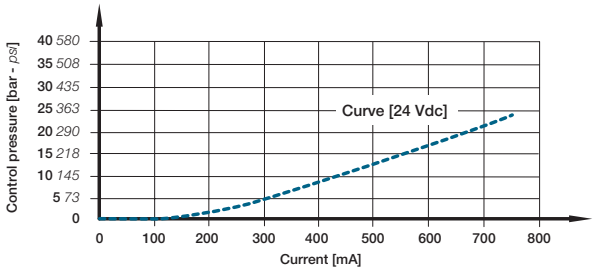

Note:

Mating connector for Deutsch DT04 is: DT06-2S

OUTLET SECTION

14	15				
L	T	1	R	5	S

There are two main types of arrangement outlet section:

- **Outlet version with RDP**

to be used when at least one section in the directional valve has electrohydraulic actuation

- **Outlet version without RDP**

to be used when no electrohydraulic actuations are present in the directional valve

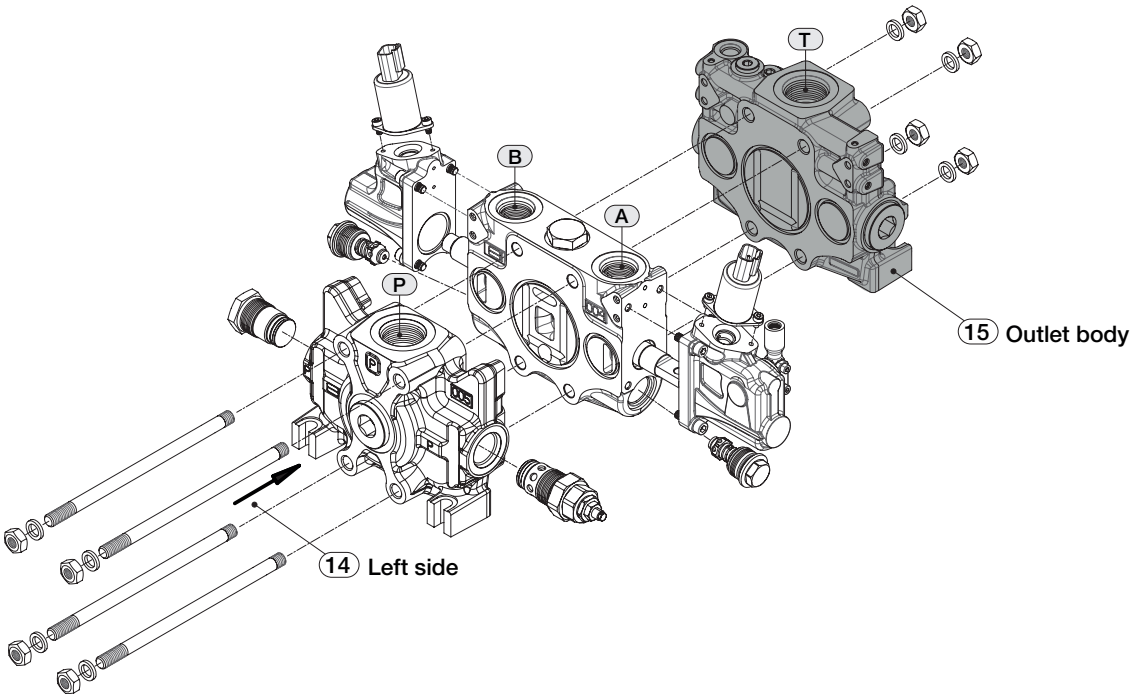

This example represents outlet section ECS12A with left configuration

L . . . . . .Left outlet side
T1R5S . . . . . .Upper outlet - 1”5/16-12 UNF (SAE16) with RDP

CODE	DESCRIPTION	DRAWING		DESCRIPTION	DRAWING
L	Outlet side LEFT	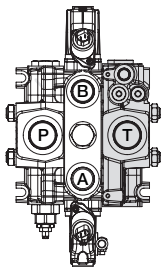	R	Outlet side RIGHT	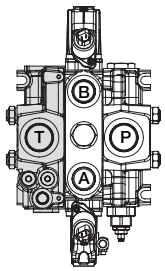

Convention for all ECS12A valves with outlet right (R) or outlet left (L):

- side A = spool actuation side
- side B = spool return action side.

OUTLET SECTION

14	15				
L	T	1	R	5	S

ARRANGEMENT OUTLET BODY

ECS12A arrangement outlet body is available in two configurations: SAE thread or BSP thread.
The maximum flexibility of the outlet body configuration is guaranteed by the positioning of the service ports plug.

It is possible to have simple T port or two ports configuration for HPCO connection; HPCO allows to extend the by pass channel and connect a second directional valve.

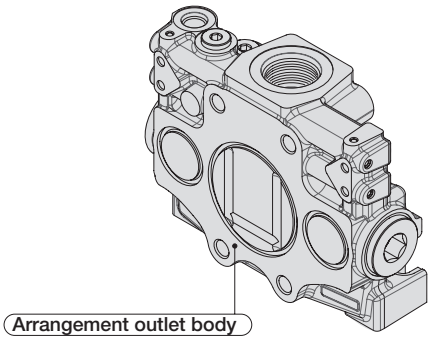

All outlet section ECS12A can be easily trasformed from simple T port to HPCO configuration just by installing two conic plugs. These examples represents arrangement outlet body in left configuration for mechanical or hydraulic control.

ARRANGEMENT OUTLET SECTION simple T port

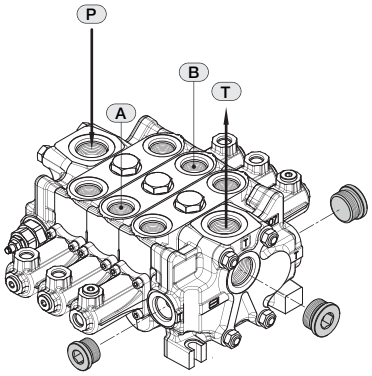

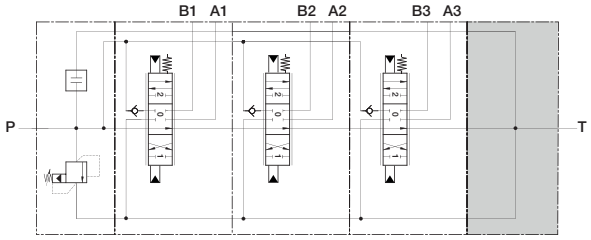

ARRANGEMENT OUTLET SECTION HPCO connection

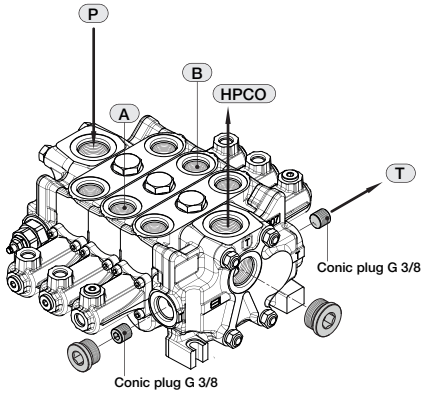

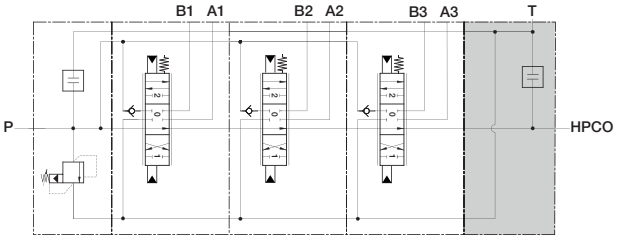

Note:

All outlet sections ECS12A for electrohydraulic configuration contain a pressure reducing valve (RDP).

We recommend to connect drain port T2 directly to tank, in order to avoid control system damages and inaccurate control.

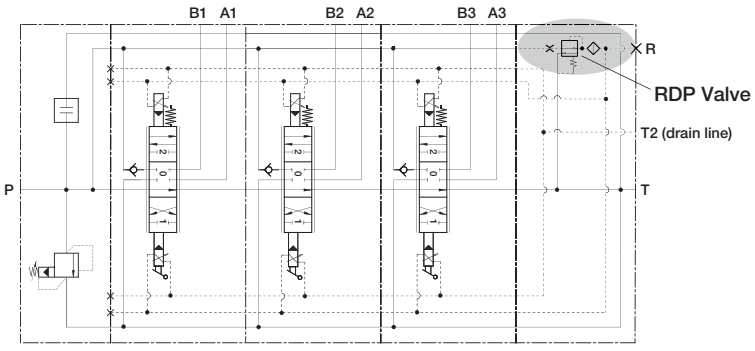

OUTLET SECTION

OUTLET CONFIGURATION FOR MECHANICAL OR HYDRAULIC CONFIGURATION (SIMPLE T PORT)

CODE	DESCRIPTION	CONFIGURATION
T15S	Upper outlet - 1”5/16-12 UNF (SAE16)	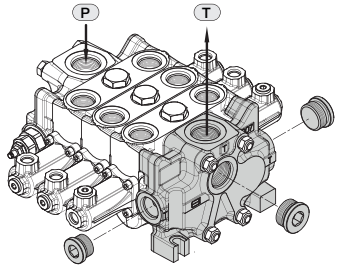
T15B	Upper outlet - G 1	
T25S	Central outlet - 1”5/16-12 UNF (SAE16)	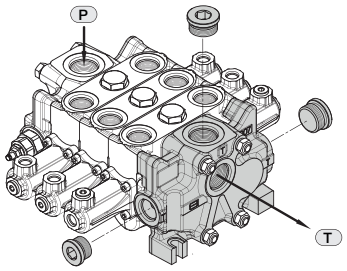
T25B	Central outlet - G 1	

OUTLET CONFIGURATION FOR MECHANICAL OR HYDRAULIC CONFIGURATION (HPCO CONNECTION)

CODE	DESCRIPTION	CONFIGURATION
TH15S	HPCO Upper outlet - 1”5/16-12 UNF (SAE16) T side outlet B - 1”5/16-12 UNF (SAE16)	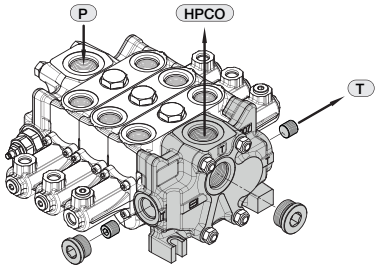
TH15B	HPCO Upper outlet - G 1 T side outlet B - G 1	
TH25S	HPCO Central outlet - 1”5/16-12 UNF (SAE16) T side outlet B - 1”5/16-12 UNF (SAE16)	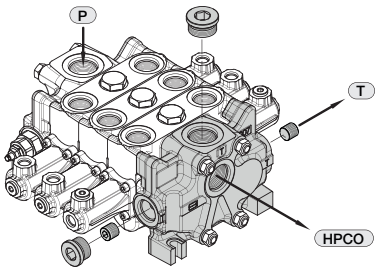
TH25B	HPCO Central outlet - G 1 T side outlet B - G 1	

OUTLET SECTION

OUTLET CONFIGURATION FOR ELECTROHYDRAULIC CONFIGURATION (SIMPLE T PORT)

CODE	DESCRIPTION	CONFIGURATION
T1R5S	Upper outlet - 1”5/16-12 UNF (SAEI6) with RDP *T2 drain: 9/16-18 UNF thread*	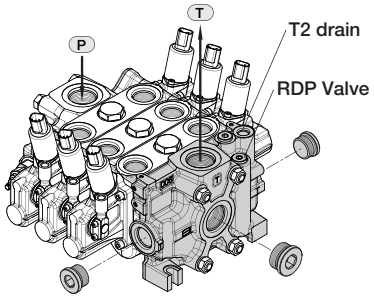
T1R5B	Upper outlet - G 1 with RDP *T2 drain: G 1/4” thread*	
T2R5S	Central outlet - 1”5/16-12 UNF (SAEI6) with RDP *T2 drain: 9/16-18 UNF thread*	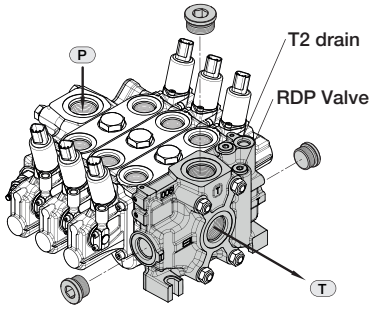
T2R5B	Central outlet - G 1 with RDP *T2 drain: G 1/4” thread*	

OUTLET CONFIGURATION FOR ELECTROHYDRAULIC CONFIGURATION (HPCO CONNECTION)

CODE	DESCRIPTION	CONFIGURATION
TH1R5S	HPCO Upper outlet - 1”5/16-12 UNF (SAEI6) T side outlet B - 1”1/16-12 UNF (SAE12) with RDP *T2 drain: 9/16-18 UNF thread*	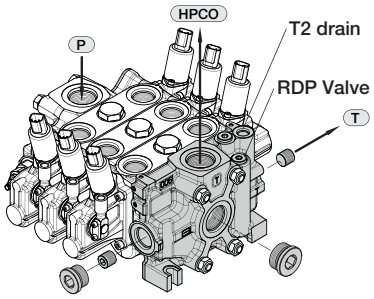
TH1R5B	HPCO Upper outlet - G 1 T side outlet B - G 3/4 with RDP *T2 drain: G 1/4” thread*	
TH2R5S	HPCO Central outlet - 1”5/16-12 UNF (SAEI6) T side outlet B - 1”1/16-12 UNF (SAE12) with RDP *T2 drain: 9/16-18 UNF thread*	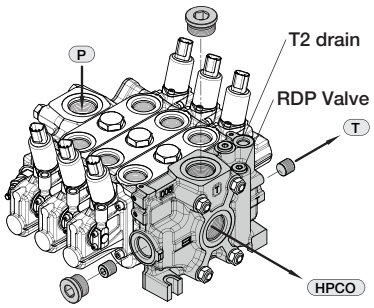
TH2R5B	HPCO Central outlet - G 1 T side outlet B - G 3/4 with RDP *T2 drain: G 1/4” thread*	

OPTION

PAINTING

On request all ECS12A directional control valves by EBI can be delivered painted (RAL 9005 black primer).

ORDER EXAMPLE OF ECS12A/1 PAINTED:

info	E	C	S	1	2	A		N	1									
inlet	L		P	1	4	S		V	0	1	1	5	0		V	0	2	
section	L		S	1	P	2	E	4	S		V	5	1	1	0	0		V	5	1	1	8	0		S	0	1	N		A	E	0	1		R	E	0	1		K	1	2	D
outlet	L		T	1	R	5	S																																					
option	X	1																																											

X1 ..... Panted color black

ACCESSORIES

LEVER ROD FOR MANUAL OPERATION

All manually operated control valves are equipped with a lever rod; the following table lists the lever available for the ECS12A control Valve.

Note:
The lever rod must be ordered separately.

Example of standard rod lever for mechanical actuation AM01:

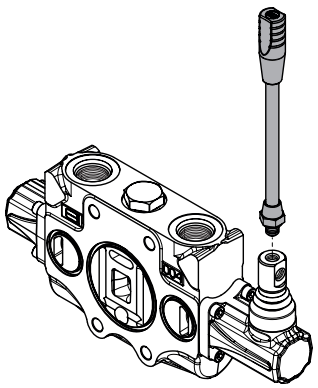

CODE	DESCRIPTION	LENGHT	DRAWING
W10A	Rod lever for electrohydraulic actuation	145 mm	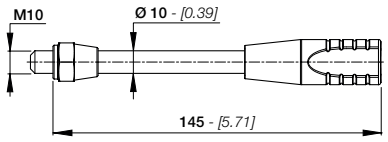
W10B	Rod lever for mechanical actuation	195 mm	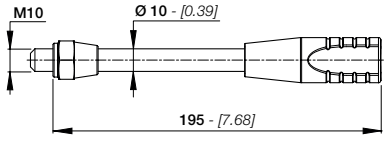
W10C	Rod lever for mechanical actuation	245 mm	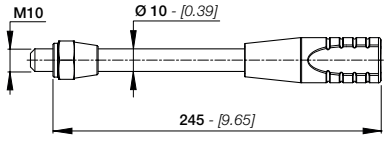

GENERAL CLAMPING TORQUE

The following design provides the main tightening torques of the **INLET SECTION**

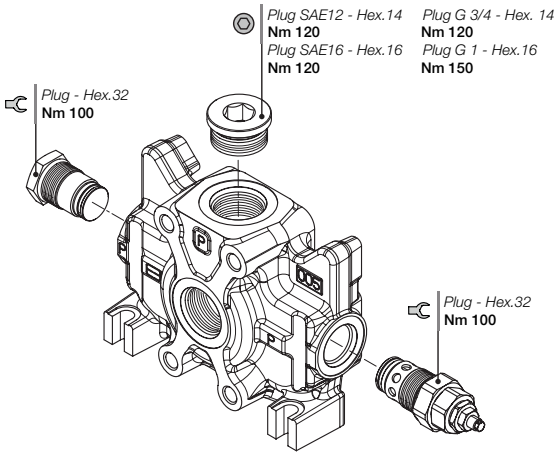

The following design provides the main tightening torques of the **OUTLET SECTION**

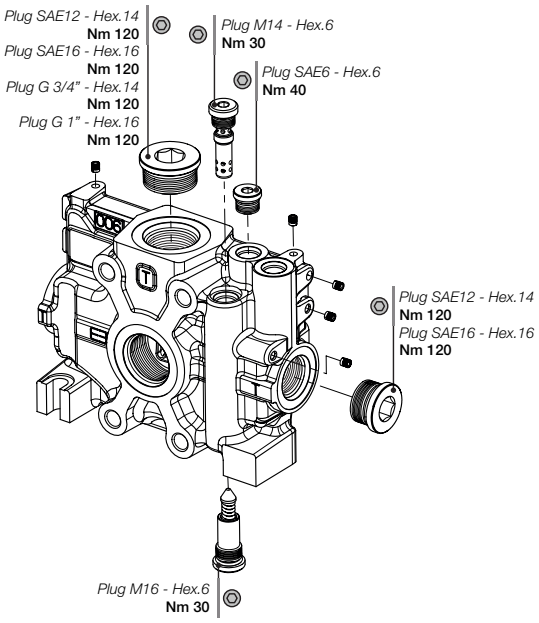

The following design provides the main tightening torques of the **WORK SECTION**

ELECTROHYDRAULIC ACTUATION

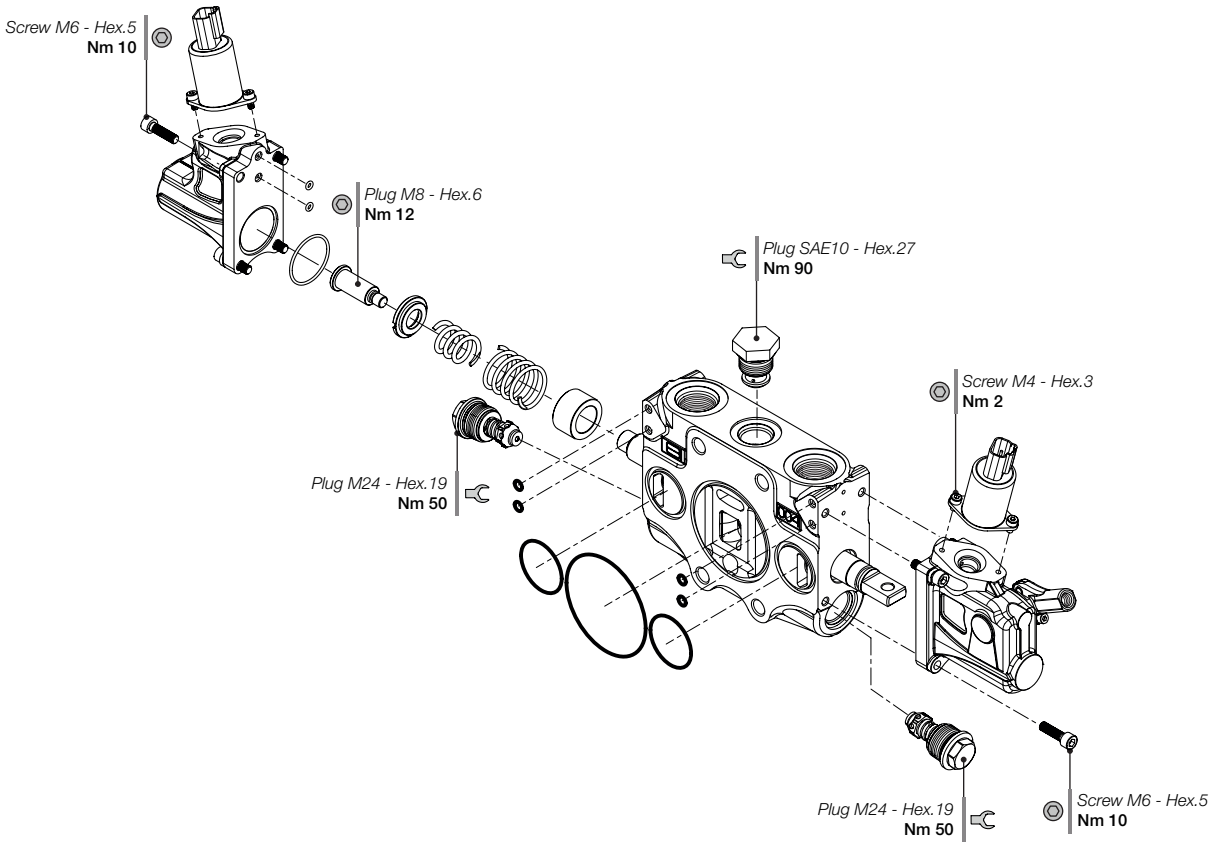

HYDRAULIC ACTUATION

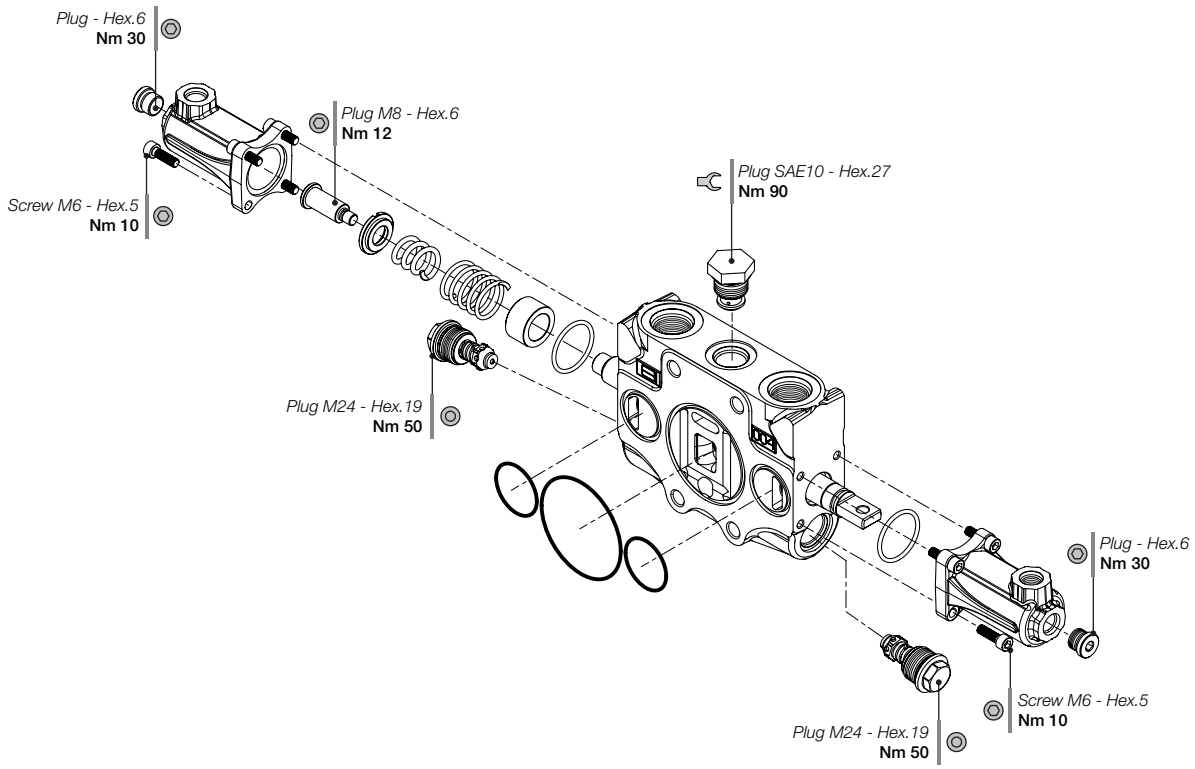

MECHANICAL ACTUATION - MANUAL, DETENT AND PNEUMATIC CONTROL

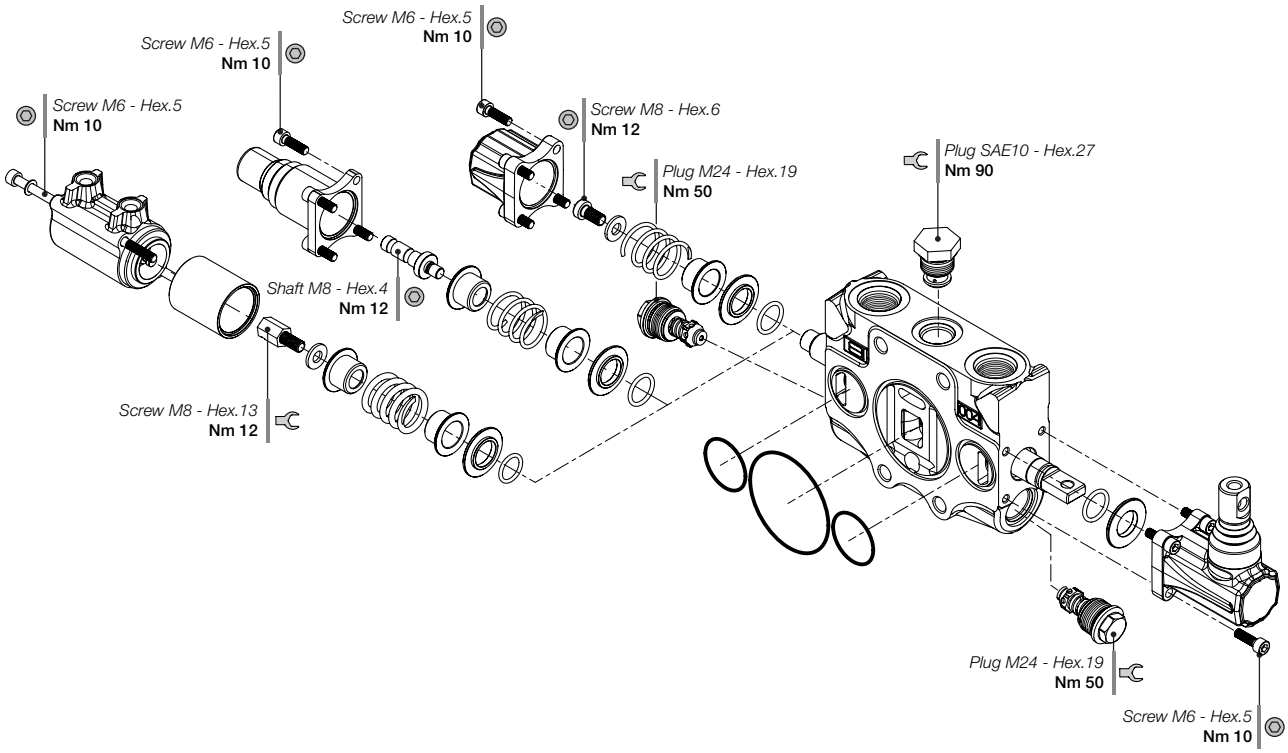

Rev. 02 - November, 2020

www.ebimc.com
Cadriano - Granarolo dell'Emilia (BO) - Italy
Via Andrea Costa, 11/2 - 40057